FORWARD

CONTENTS

HOW TO USE THIS MANUAL

Mechanism Illustrations

Mio 50 / 100

SERVICE MANUAL

Forward

This service manual contains the technical data of each component inspection and repair for the SANYANG Mio 50 / 100 scooters. The manual is shown with illustrations and focused on “Service Procedures”, “Operation Key Points”, and “Inspection Adjustment” so that provides technician with service guidelines.

If the style and construction of the scooter, Mio 50 / 100, are different from that of the photos, pictures shown in this manual, the actual vehicle shall prevail. Specifications are subject to change without notice.

Service Department

SANYANG INDUSTRY CO., LTD.

How To Use This Manual

This service manual describes basic information of different system parts and system inspection & service for SANYANG Mio 50 / 100 scooters. In addition, please refer to the manual contents in detailed for the model you serviced in inspection and adjustment.

The first chapter covers general information and trouble diagnosis.
The second chapter covers service maintenance information and special tools manual.
The third to the 11th chapters cover engine and driving systems.
The 12th chapter is cooling system.
The 13th to the 16th chapter is contained the parts set of assembly frame body.
The 17th chapter is electrical equipment.
The 18th chapter is wiring diagram.
Please see index of content for quick having the special parts and system information.

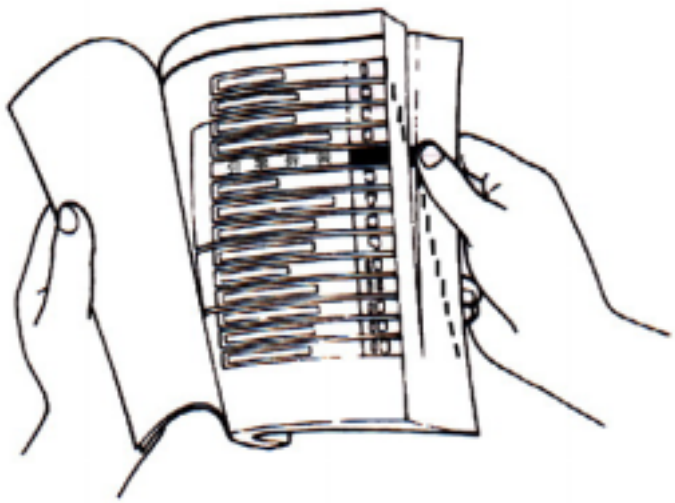

There are 4 buttons, “Forward”, “Contents”, “How to use this manual” and “Mechanism Illustrations” on the CD-R version, and can be access to these items by click the mouse.

If user wants to look for the content of each chapter, selecting the words of each chapter on the contents can reach to each chapter. There are two buttons, “Homepage and contents, onto the top line of first page of the each chapter. Thus, if the user needs to check other chapters, he can click the top buttons to back the homepage or contents. The content of each chapter can be selected too. Therefore, when needs to checking the content inside of the chapter, click the content words of the chapter so that can back to the initial section of the content. In addition, there is a “To this chapter contents” button at the second page of each contents so that clicking the button can back to the contents of this chapter.

Contents

Page	Content	Index
1-1 ~ 1-18	General Information	1
2-1 ~ 2-18	Service Maintenance Information	2
3-1 ~ 3-8	Lubrication System	3
4-1 ~ 4-12	Fuel System	4
5-1 ~ 5-8	Engine Removal	5
6-1 ~ 6-18	Cylinder Head/Valve	6
7-1 ~ 7-8	Cylinder/Piston	7
8-1 ~ 8-14	“V” Type Belt Driving System / Kick-Starter	8
9-1 ~ 9-8	Final Driving Mechanism	9
10-1 ~ 10-8	Alternator	10
11-1 ~ 11-8	Crankshaft / Crankcase	11
12-1 ~ 12-16	Body Cover	12
13-1 ~ 13-14	Brake	13
14-1 ~ 14-12	Steering / Front Wheel / Front Cushion	14
15-1 ~ 15-4	Rear Wheel / Rear Cushion	15
16-1 ~ 16-26	Electrical Equipment	16
17-1 ~ 17-8	Emission Control System	17
18-1 ~ 18-2	Electrical Diagram	18

Mechanism Illustrations

HU05U / HU10U / HU10W

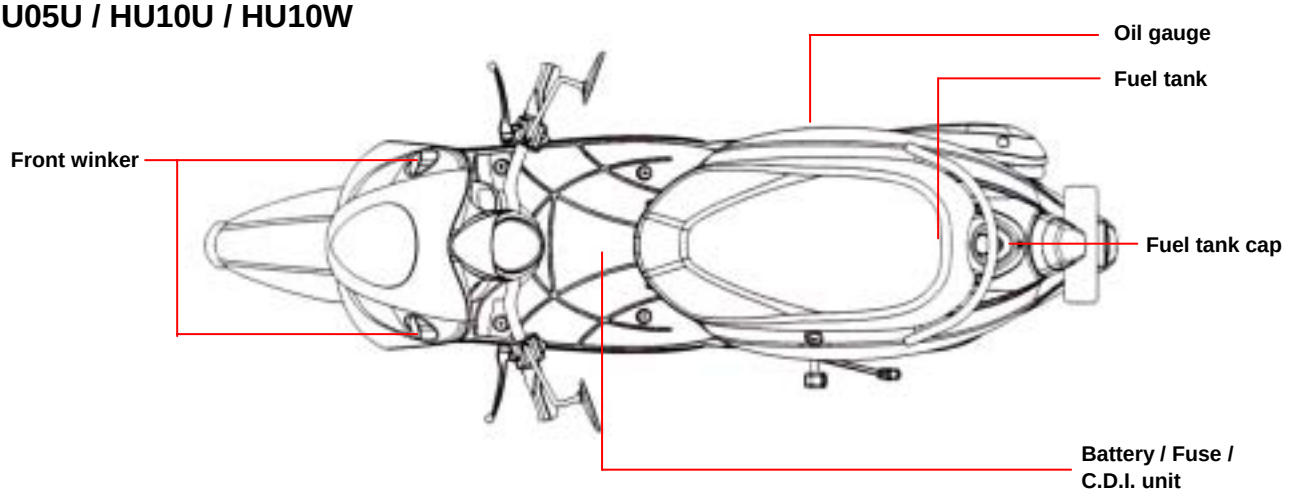

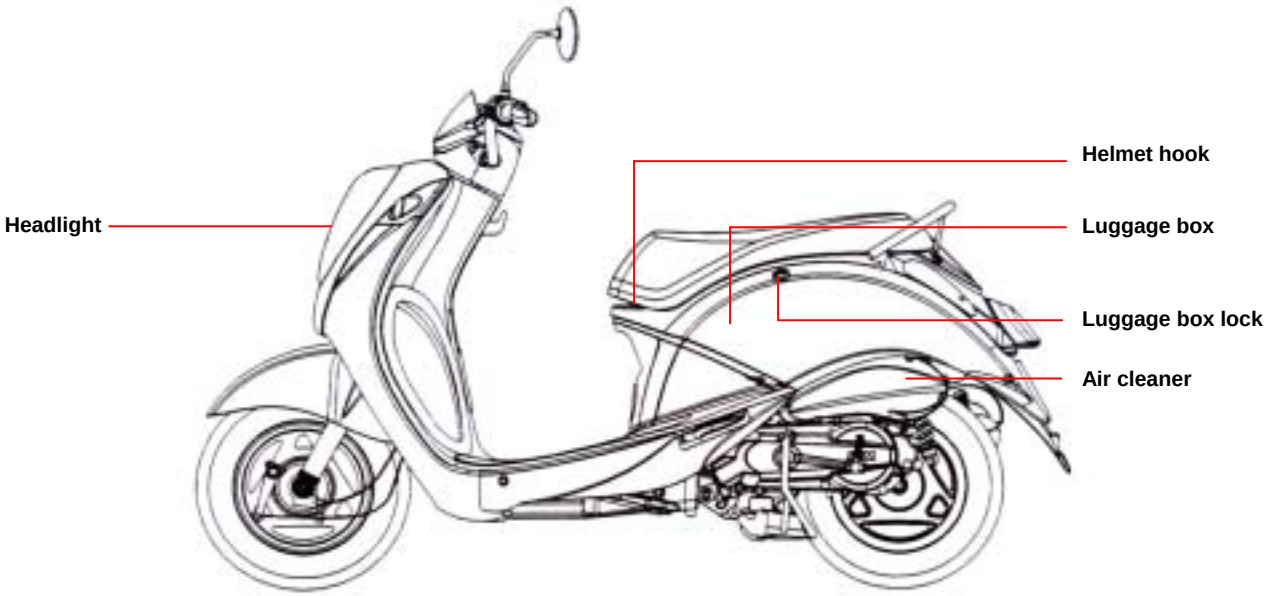

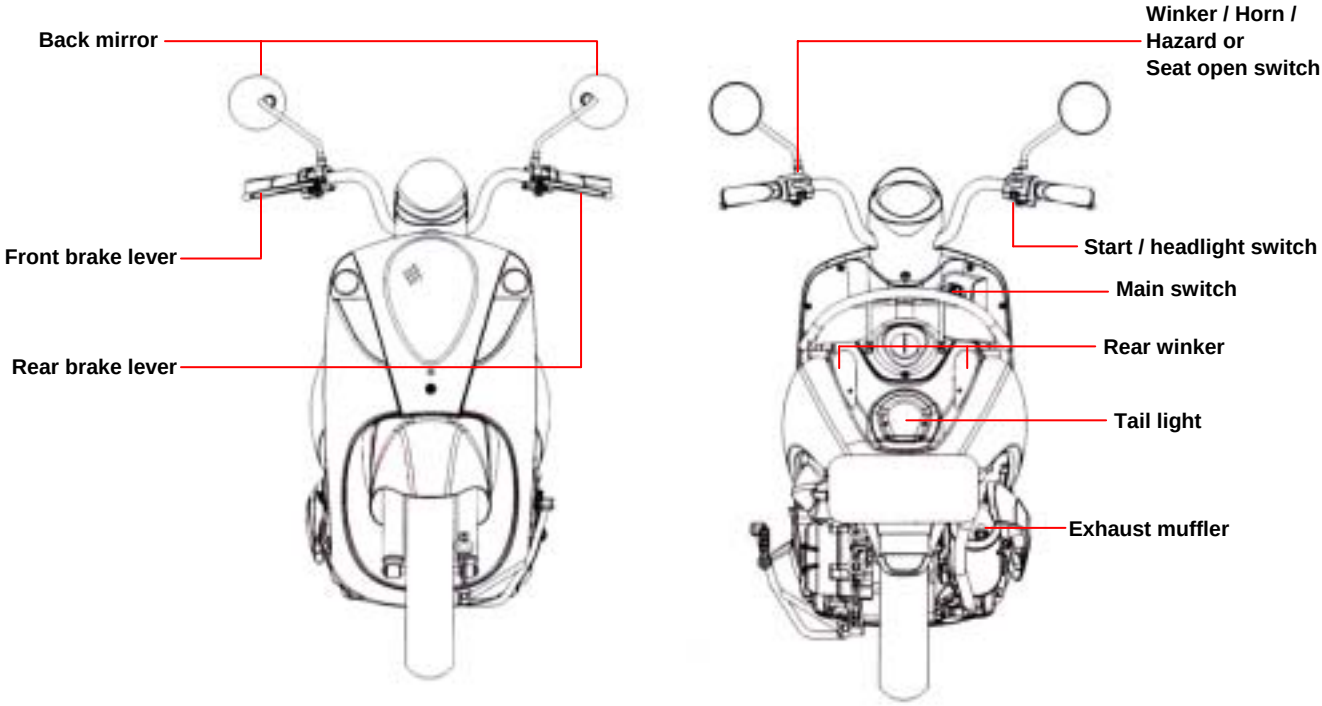

Symbols and Marks ····· 1-1
General Safety ····· 1-2
Service Precautions ····· 1-3
Specifications ····· 1-9
Torque Values ····· 1-11
Troubles Diagnosis ····· 1-13
Lubrication Points ····· 1-17

Symbols and Marks

Symbols and marks are used in this manual to indicate what and where the special service are needed, in case supplemental information is procedures needed for these symbols and marks, explanations will be added to the text instead of using the symbols or marks.

Warning	Means that serious injury or even death may result if procedures are not followed.
Caution	Means that equipment damages may result if procedures are not followed.
Engine oil	Limits to use SAE 10W-30 API SG class oil. Warranty will not cover the damage that caused by not apply with the limited engine oil. (Recommended oil: KING MATE G-3 oil)
Grease	King Mate G-3 is recommended.
Gear oil	King Mate gear oil serials are recommended. (Bramax HYPOID GEAR OIL # 140)
Locking sealant	Apply sealant; medium strength sealant should be used unless otherwise specified.
Oil seal	Apply with lubricant.。
Renew	Replace with a new part before installation.
Brake fluid	Use recommended brake fluid DOT3 or WELLRUN brake fluid.
Special tools	Special tools
Correct	Meaning correct installation.
Wrong	Meaning wrong installation.
Indication	Indication of components.
Directions	Indicates position and operation directions
	Components assembly directions each other.
	Indicates where the bolt installation direction, --- means that bolt cross through the component (invisibility).

General Safety

Carbon monoxide

If you must run your engine, ensure the place is well ventilated. Never run your engine in a closed area. Run your engine in an open area, if you have to run your engine in a closed area, be sure to use an extractor.

Caution

Exhaust contains toxic gas which may cause one to lose consciousness and even result in death.

Gasoline

Gasoline is a low ignition point and explosive material. Work in a well-ventilated place, no flame or spark should be allowed in the work place or where gasoline is being stored.

Caution

Gasoline is highly flammable, and may explode under some conditions, keep it away from children.

Used engine oil

Caution

Prolonged contact with used engine oil (or transmission oil) may cause skin cancer although it might not be verified.
We recommend that you wash your hands with soap and water right after contacting. Keep the used oil beyond reach of children.

Hot components

Caution

Components of the engine and exhaust system can become extremely hot after engine running. They remain very hot even after the engine has been stopped for some time. When performing service work on these parts, wear insulated gloves and wait until cooling off.

Battery

Caution

- Battery emits explosive gases; flame is strictly prohibited. Keeps the place well ventilated when charging the battery.
- Battery contains sulfuric acid (electrolyte) which can cause serious burns so be careful do not be spray on your eyes or skin. If you get battery acid on your skin, flush it off immediately with water. If you get battery acid in your eyes, flush it off immediately with water and then go to hospital to see an ophthalmologist.
- If you swallow it by mistake, drink a lot of water or milk, and take some laxative such as castor oil or vegetable oil and then go to see a doctor.
- Keep electrolyte beyond reach of children.

Brake shoe

Do not use an air hose or a dry brush to clean components of the brake system; use a vacuum cleaner or the equivalent to avoid dust flying.

Caution

Inhaling brake shoe or pad ash may cause disorders and cancer of the breathing system

Brake fluid

Caution

Spilling brake fluid on painted, plastic, or rubber parts may cause damage to the parts. Place a clean towel on the above-mentioned parts for protection when servicing the brake system.
Keep the brake fluid beyond reach of children.

Service Precautions

- Always use with SANYANG genuine parts and recommended oils. Using non-designed parts for SANYANG ATV may damage the ATV.

- Special tools are designed for remove and install of components without damaging the parts being worked on. Using wrong tools may result in parts damaged.

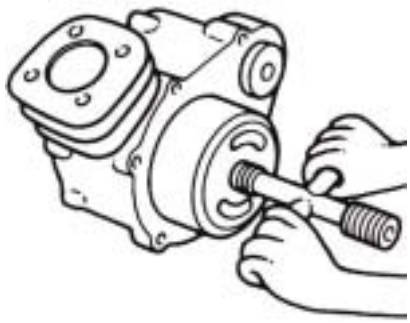

- When servicing this ATV, use only metric tools. Metric bolts, nuts, and screws are not interchangeable with the English system, using wrong tools and fasteners may damage this vehicle.
- Clean the outside of the parts or the cover before removing it from the ATV. Otherwise, dirt and deposit accumulated on the part's surface may fall into the engine, chassis, or brake system to cause damage.
- Wash and clean parts with high ignition point solvent, and blow dry with compressed air. Pay special attention to O-rings or oil seals because most cleaning agents have an adverse effect on them.

- Never bend or twist a control cable to prevent unsmooth control and premature worn out.

- Rubber parts may become deteriorated when old, and prone to be damaged by solvent and oil. Check these parts before installation to make sure that they are in good condition, replace if necessary.
- When loosening a component which has different sized fasteners, operate with a diagonal pattern and work from inside out. Loosen the small fasteners first. If the bigger ones are loosen first, small fasteners may receive too much stress.
- Store complex components such as transmission parts in the proper assemble order and tie them together with a wire for ease of installation later.

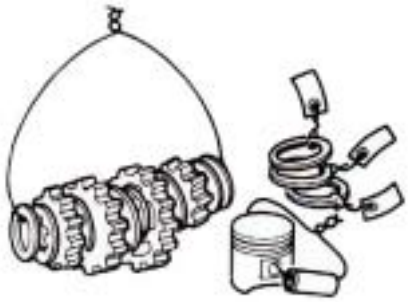

- Note the reassemble position of the important components before disassembling them to ensure they will be reassembled in correct dimensions (depth, distance or position).
- Components not to be reused should be replaced when disassembled including gaskets metal seal rings, O-rings, oil seals, snap rings, and split pins.

- The length of bolts and screws for assemblies, cover plates or boxes is different from one another, be sure they are correctly installed. In case of confusion, Insert the bolt into the hole to compare its length with other bolts, if its length out side the hole is the same with other bolts, it is a correct bolt. Bolts for the same assembly should have the same length.

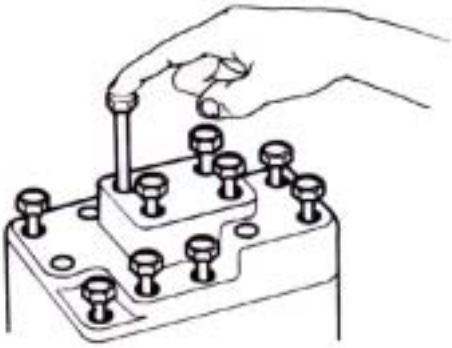

- Tighten assemblies with different dimension fasteners as follows: Tighten all the fasteners with fingers, then tighten the big ones with special tool first diagonally from inside toward outside, important components should be tightened 2 to 3 times with appropriate increments to avoid warp unless otherwise indicated. Bolts and fasteners should be kept clean and dry. Do not apply oil to the threads.

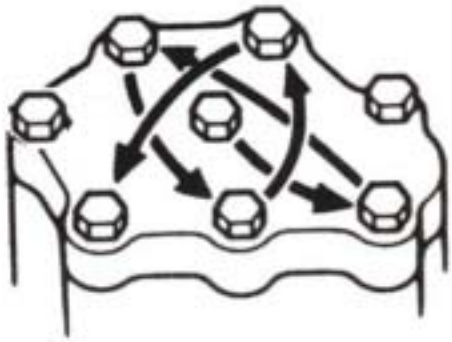

- When oil seal is installed, fill the groove with grease, install the oil seal with the name of the manufacturer facing outside, and check the shaft on which the oil seal is to be installed for smoothness and for burrs that may damage the oil seal.

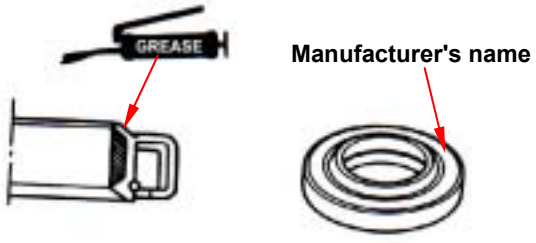

- Remove residues of the old gasket or sealant before reinstallation, grind with a grindstone if the contact surface has any damage.

- The ends of rubber hoses (for fuel, vacuum, or coolant) should be pushed as far as they can go to their connections so that there is enough room below the enlarged ends for tightening the clamps.

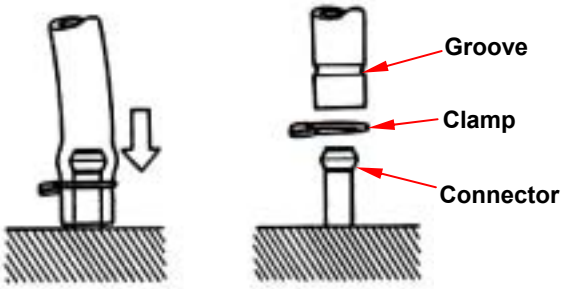

- Rubber and plastic boots should be properly reinstalled to the original correct positions as designed.

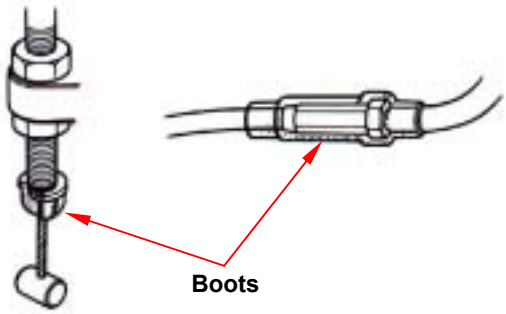

- The tool should be pressed against two (inner and outer) bearing races when removing a ball bearing. Damage may result if the tool is pressed against only one race (either inner race or outer race). In this case, the bearing should be replaced. To avoid damaging the bearing, use equal force on both races.

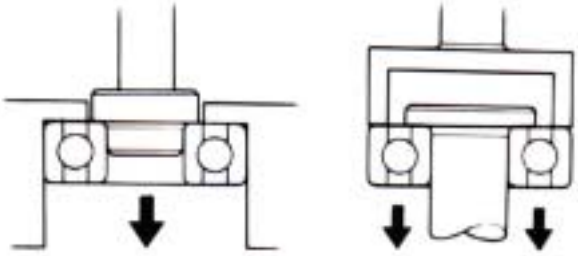

Both of these examples can result in bearing damage.

- Lubricate the rotation face with specified lubricant on the lubrication points before assembling.

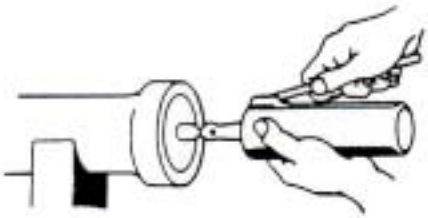

- Check if positions and operation for installed parts is in correct and properly.

- Make sure service safety each other when conducting by two persons.

- Note that do not let parts fall down.

- Before battery removal operation, it has to remove the battery negative (-) cable firstly. Notre tools like open-end wrench do not contact with body to prevent from circuit short and create spark.

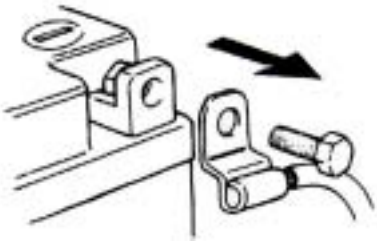

- After service completed, make sure all connection points is secured.
  Battery positive (+) cable should be connected firstly.
- And the two posts of battery have to be greased after connected the cables.

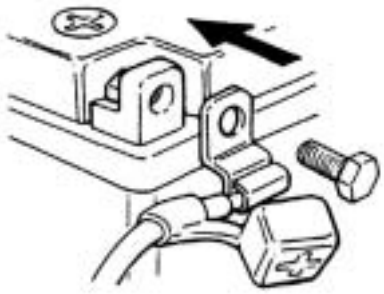

- Make sure that the battery post caps are located in properly after the battery posts had been serviced.

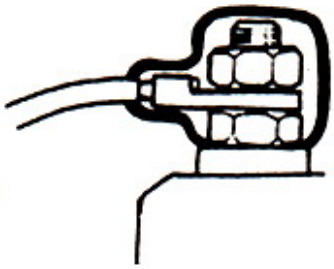

- If fuse burned, it has to find out the cause and solved it. And then replace with specified capacity fuse.

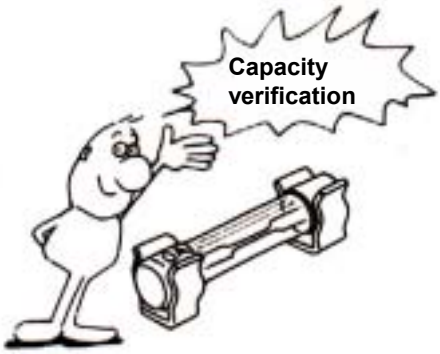

- When separating a connector, it locker has to be unlocked firstly. Then, conduct the service operation.

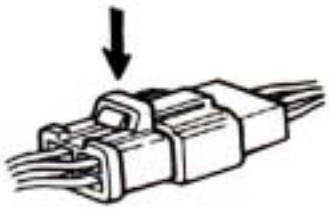

- Do not pull the wires as removing a connector or wires. Hold the connector body.

- Make sure if the connector pins are bent, extruded or loosen.

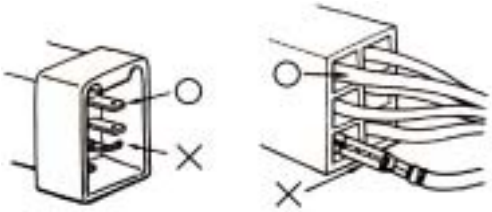

- Insert the connector completely.

  If there are two lockers on two connector sides, make sure the lockers are locked in properly.

  Check if any wire loose.

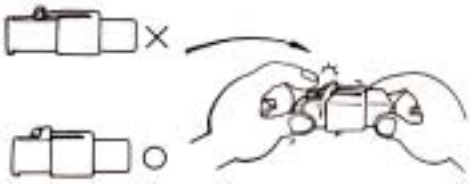

- Check if the connector is covered by the twin connector boot completely and secured properly.

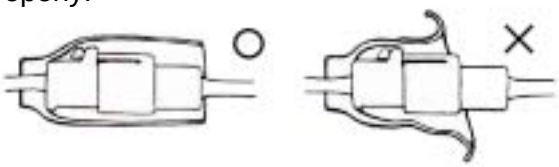

- Before terminal connection, check if the boot is crack or the terminal is loose.

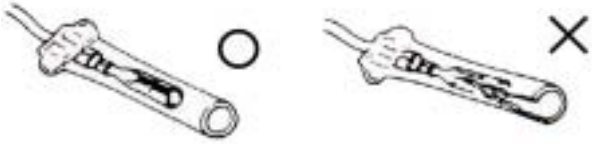

- Insert the terminal completely.
  Check if the terminal is covered by the boot.
  Do not let boot open facing up.

- Secure wires and wire harnesses to the frame with respective wire bands at the designated locations. Tighten the bands so that only the insulated surfaces contact the wires or wire harnesses.

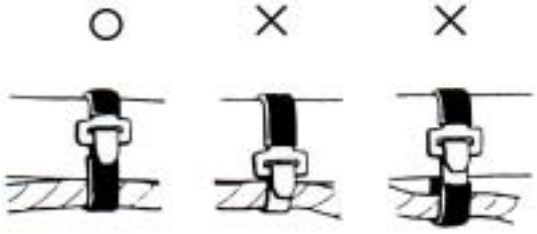

- Wire band and wire harness have to be clamped secured properly.

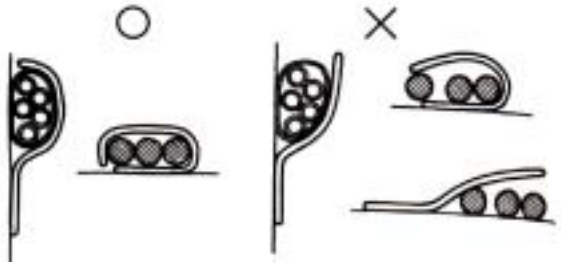

- Do not squeeze wires against the weld or its clamp.

- Do not let the wire harness contact with rotating, moving or vibrating components as routing the harness.

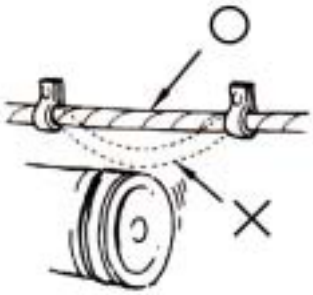

- Keep wire harnesses far away from the hot parts.

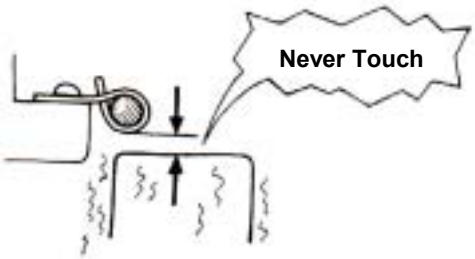

- Route wire harnesses to avoid sharp edges or corners and also avoid the projected ends of bolts and screws.

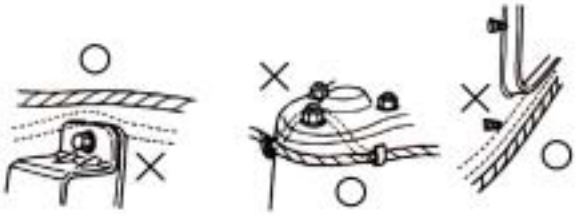

- Route harnesses so that they neither pull too tight nor have excessive slack.

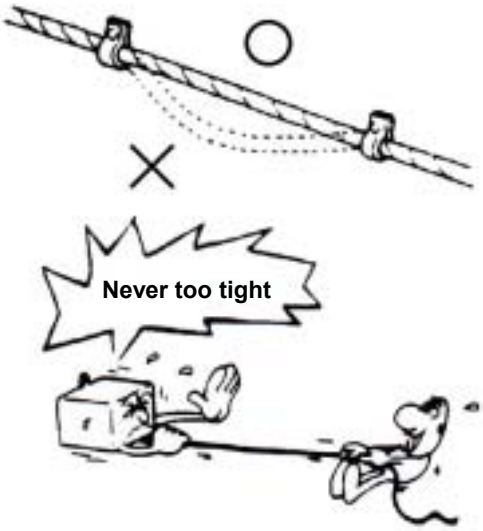

- Protect wires or wire harnesses with electrical tape or tube if they contact a sharp edge or corner. Thoroughly clean the surface where tape is to be applied.

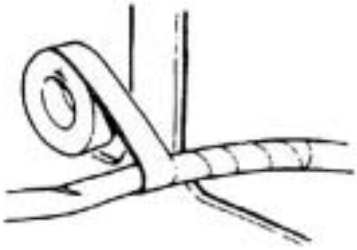

- Secure the rubber boot firmly as applying it on wire harness.

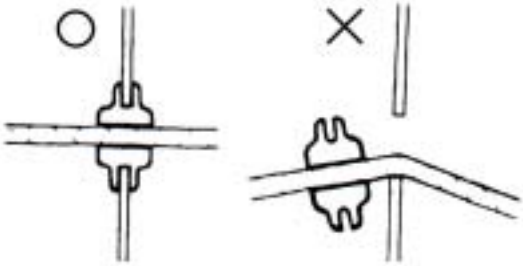

- Never use wires or harnesses which insulation has been broken. Wrap electrical tape around the damaged parts or replace them.

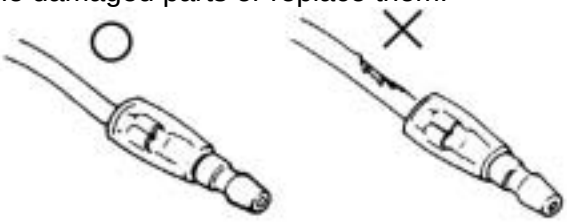

- Never clamp or squeeze the wire harness as installing other components.

- Do not let the wire harness been twisted as installation.

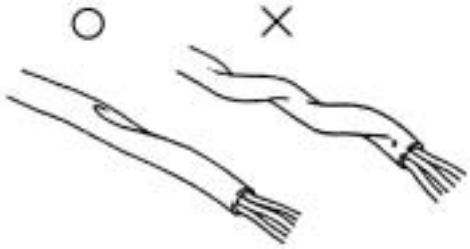

- Wire harnesses routed along the handlebar should not be pulled too tight or have excessive slack, be rubbed against or interfere with adjacent or surrounding parts in all steering positions.

- Before operating a test instrument, operator should read the operation manual of the instrument. And then, conduct test in accordance with the instruction.

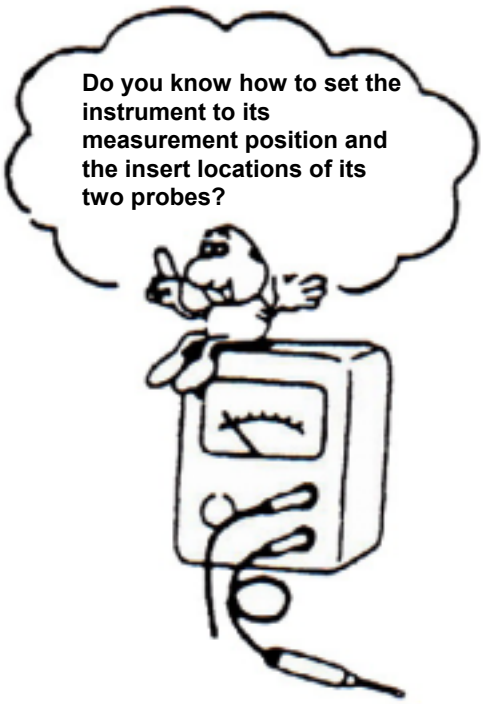

- With sand paper to clean rust on connector pins/terminals if found. And then conduct connection operation later.

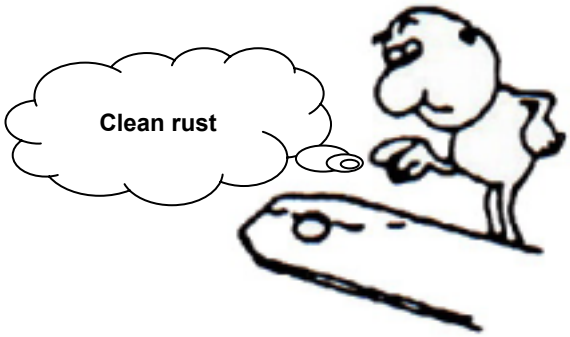

Specifications

MAKER			SANYANG	MODEL		HU05U
Dimension	Overall Length		**1710 mm**	Suspension System	Front	**TELESCOPE**
	Overall Width		**700 mm**		Rear	**UNIT SWING**
	Overall Height		**1005 mm**	Tire Specifications	Front	**3.0-10 42J**
	Wheel Base		**1170 mm**		Rear	**90/90-10 50J**
Weight	Curb Weight	Front	**31 kg**	Brake System	Front	**DRUM (ø 110 mm)**
		Rear	**49 kg**			
		Total	**80 kg**		Rear	**DRUM (ø 95 mm)**
	Passengers/Weight		**Two / 110 kg**	Performance	Max. Speed	**Above 60 km/hr**
	Total Weight	Front	**53 kg**		Climb Ability	**Below 20°**
		Rear	**137 kg**	Reduction	Primary Reduction	**Belt**
		Total	**190 kg**		Secondary Reduction	**Gear**
Engine	Type		**4-STROKE ENGINE**		Clutch	**Centrifugal, dry type**
	Installation and arrangement		**Vertical, below center, incline 80°**		Transmission	**C.V.T., auto speed change**
	Fuel Used		**Above 92 unleaded**	Speedometer		**0 ~ 90 km/hr**
	Cycle/Cooling		**4-stroke/ forced air cooled**	Horn		**70~90 dB/A**
	Cylinder	Bore	**37 mm**	Muffler		**Expansion & Pulse Type**
		Stroke	**46 mm**	Exhaust Pipe Position and Direction		**Right side, and Backward**
		Number/Arrangement	**SINGLE CYLINDER**	Lubrication System		**Forced circulation & splashing**
	Displacement		**49.5 cc**	Exhaust Concentration	Solid Particulate	**-**
	Compression Ratio		**12.6 : 1**		CO	**Below 3.0 % 以下**
	Max. HP		**3.8 ps /8000 rpm**		HC	**Below 2000 ppm**
	Max. Torque		**0.38 kg-m / 6500 rpm**	E.E.C.		√
	Ignition		**C.D.I.**	P.C.V.		√
	Starting System		**Power & Foot**	Catalytic reaction control system		√

Specifications

MAKER			SANYANG	MODEL		HU10U/W
Dimension	Overall Length		**1710 mm**	Suspension System	Front	**TELESCOPE**
	Overall Width		**700 mm**		Rear	**UNIT SWING**
	Overall Height		**1020 mm**	Tire Specifications	Front	**90/90-10 50J**
	Wheel Base		**1220 mm**		Rear	**90/90-10 50J**
Weight	Curb Weight	Front	**32.5 kg**	Brake System	Front	**DRUM (ø 110 mm)**
		Rear	**55 kg**			**DISK (ø 160 mm)**
		Total	**87.5 kg**		Rear	**DRUM (ø 110 mm)**
	Passengers/Weight		**Two / 110 kg**	Performance	Max. Speed	**Above 90 km/hr**
	Total Weight	Front	**54.5 kg**		Climb Ability	**Below 26°**
		Rear	**143 kg**	Reduction	Primary Reduction	**Belt**
		Total	**197.5 kg**		Secondary Reduction	**Gear**
Engine	Type		**4-STROKE ENGINE**		Clutch	**Centrifugal, dry type**
	Installation and arrangement		**Vertical, below center, incline 80°**		Transmission	**C.V.T., auto speed change**
	Fuel Used		**Above 92 unleaded**	Speedometer		**0 ~ 120 km/hr**
	Cycle/Cooling		**4-stroke/ forced air cooled**	Horn		**70~90 dB/A**
	Cylinder	Bore	**50 mm**	Muffler		**Expansion & Pulse Type**
		Stroke	**51.5 mm**	Exhaust Pipe Position and Direction		**Right side, and Backward**
		Number/Arrangement	**SINGLE CYLINDER**	Lubrication System		**Forced circulation & splashing**
	Displacement		**101 cc**	Exhaust Concentration	Solid Particulate	**-**
	Compression Ratio		**10.5 : 1**		CO	**Below 3.0 % 以下**
	Max. HP		**7.7 ps /8000 rpm**		HC	**Below 2000 ppm**
	Max. Torque		**0.77 kg-m / 6500 rpm**	E.E.C.		√
	Ignition		**C.D.I.**	P.C.V.		√
	Starting System		**Power & Foot**	Catalytic reaction control system		√

Torque Values

The torque values listed in above table are for more important tighten torque values. Please see standard values for not listed in the table.

Standard Torque Values for Reference

Type	Tighten Torque	Type	Tighten Torque
5 mm bolt、nut	0.45~0.6kgf-m	5 mm screw	0.35~0.5kgf-m
6 mm bolt、nut	0.8~1.2kgf-m	6 mm screw、SH nut	0.7~ 1.1kgf-m
8 mm bolt、nut	1.8~2.5kgf-m	6 mm bolt、nut	1.0 ~1.4kgf-m
10 mm bolt、nut	3.0~4.0kgf-m	8 mm bolt、nut	2.4 ~3.0kgf-m
12 mm bolt、nut	5.0~6.0kgf-m	10 mm bolt、nut	3.5~4.5kgf-m

Engine Torque Values

Item	Q'ty	Thread Dia. (mm)	Torque Value(kgf-m)	Remarks
Cylinder stud bolt	4	8	0.7~1.0	Tighten to crankcase
Cylinder head nut	4	8	1.8~2.2	Apply oil to thread
Cylinder head left bolt	2	6	1.0~1.4	
Cylinder head side cover bolt	2	6	1.0~1.4	
Valve adjustment cap	2	30	1.3~1.7	
Tappet adjustment screw nut	4	5	0.7~1.1	Apply oil to thread
Spark plug	1	10	1.0~1.4	
Cylinder head stud bolt (inlet pipe)	2	6	0.7~1.0	
Cylinder head stud bolt (EX. pipe)	2	6	0.7~1.0	
Tensioner lifter bolt	2	6	1.0~1.4	
Tensioner bolt	1	6	0.8~1.2	Socket bolt
Carburetor insulator bolt	2	6	0.7~1.0	
Oil pump screw	2	3	0.1~0.3	
Engine left cover bolt	7	6	1.0~1.5	
Engine oil draining bolt	1	12	3.5~4.5	
Engine oil strainer cap	1	30	1.3~1.7	
Mission draining bolt	1	8	0.8~1.2	
Mission filling bolt	1	10	1.0~1.4	
Clutch driving plate nut	1	28	5.0~6.0	
Clutch outer nut	1	12	5.0~6.0	
Drive face nut	1	12	5.0~6.0	
ACG. Flywheel nut	1	12	5.0~6.0	
Crankcase bolts	7	6	1.5~2.0	
Mission case bolt	7	8	2.0~2.4	
One-way clutch tighten bolts	3	6	1.0~1.4	Apply locking sealant
One-way clutch tighten nut	1	22	9.0~10.0	Apply oil to thread
Exhaust pipe bolts	2	8	3.0~3.6	
Exhaust pipe connection nuts	2	6	1.0~1.4	

Frame Torque Values

Item	Q'ty	Thread Dia. (mm)	Torque Value (Kg-m)	Remarks
Mounting bolt for steering handlebar	1	10	4.0~5.0	
Mounting nut for steering rod	1	25.4	1.0~2.0	
Cone seat for steering rod	1	25.4	0.2~0.3	
Front wheel shaft nut	1	12	5.0~7.0	
Rear wheel shaft nut	1	16	11.0~13.0	
Wheel hub/rim mounting nuts	8	8	2.8~3.2	
Speedometer cable locking screw	1	5	0.15~0.3	
Front shock absorber mounting bolts	4	8	2.4~3.0	
Rear shock absorber upper connection bolt	1	10	3.5~4.5	
Rear shock absorber upper connection bolt	1	8	2.4~3.0	
Brake lever bolts	2	6	0.8~1.2	
Front brake hose bolts	2	10	3.3~3.7	
Front brake air-bleeding valve	1	6	0.8~1.0	
Front brake disc mounting bolts	4	10	4.0~4.5	
Front brake clipper mounting bolts	2	10	3.1~3.5	
Drum brake arm bolts (front/rear)	2	6	0.8~1.2	
Engine suspension bracket bolts	2	10	4.5~5.5	On frame side
Engine connection bolt	1	10	4.5~5.5	On engine side
Main standard nut	1	10	3.5~4.5	
Foot-starting lever bolt	1	6	1.6~1.8	
Air cleaner bolts	2	6	1.0~1.4	

Troubles Diagnosis

A. Engine hard to start or can not be started

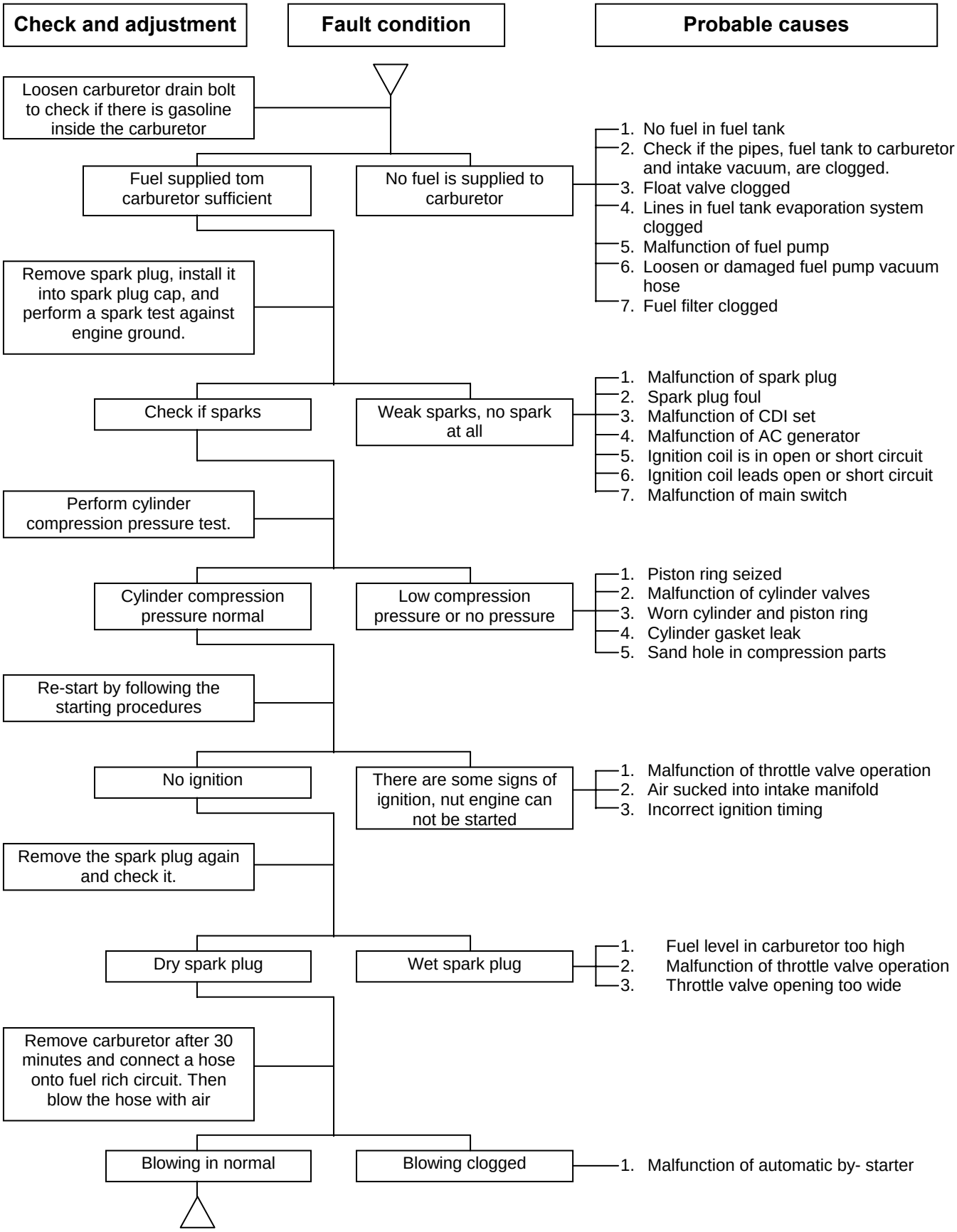

B. Engine run sluggish (Speed does not pick up, lack of power)

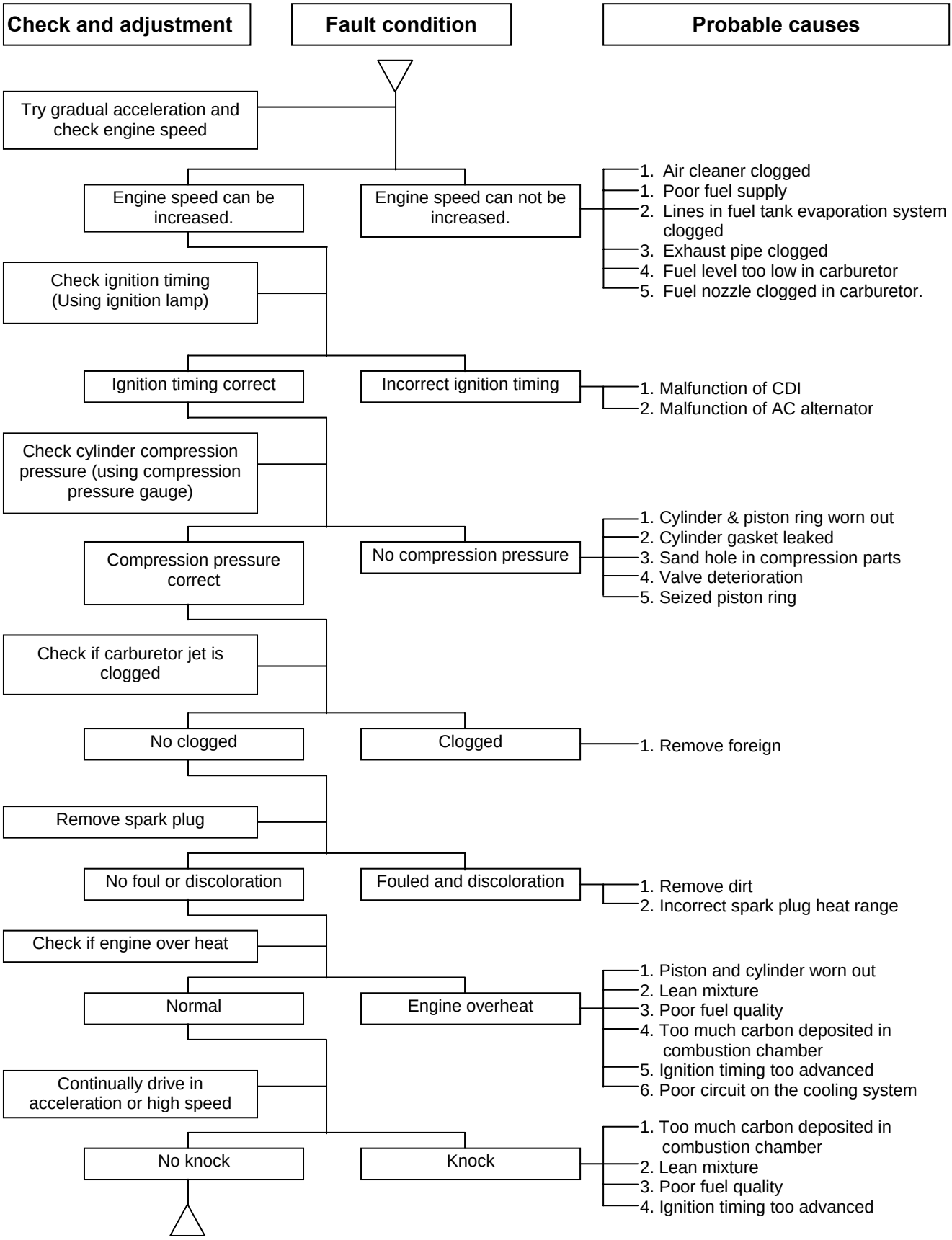

C. Engine runs sluggish (especially in low speed and idling)

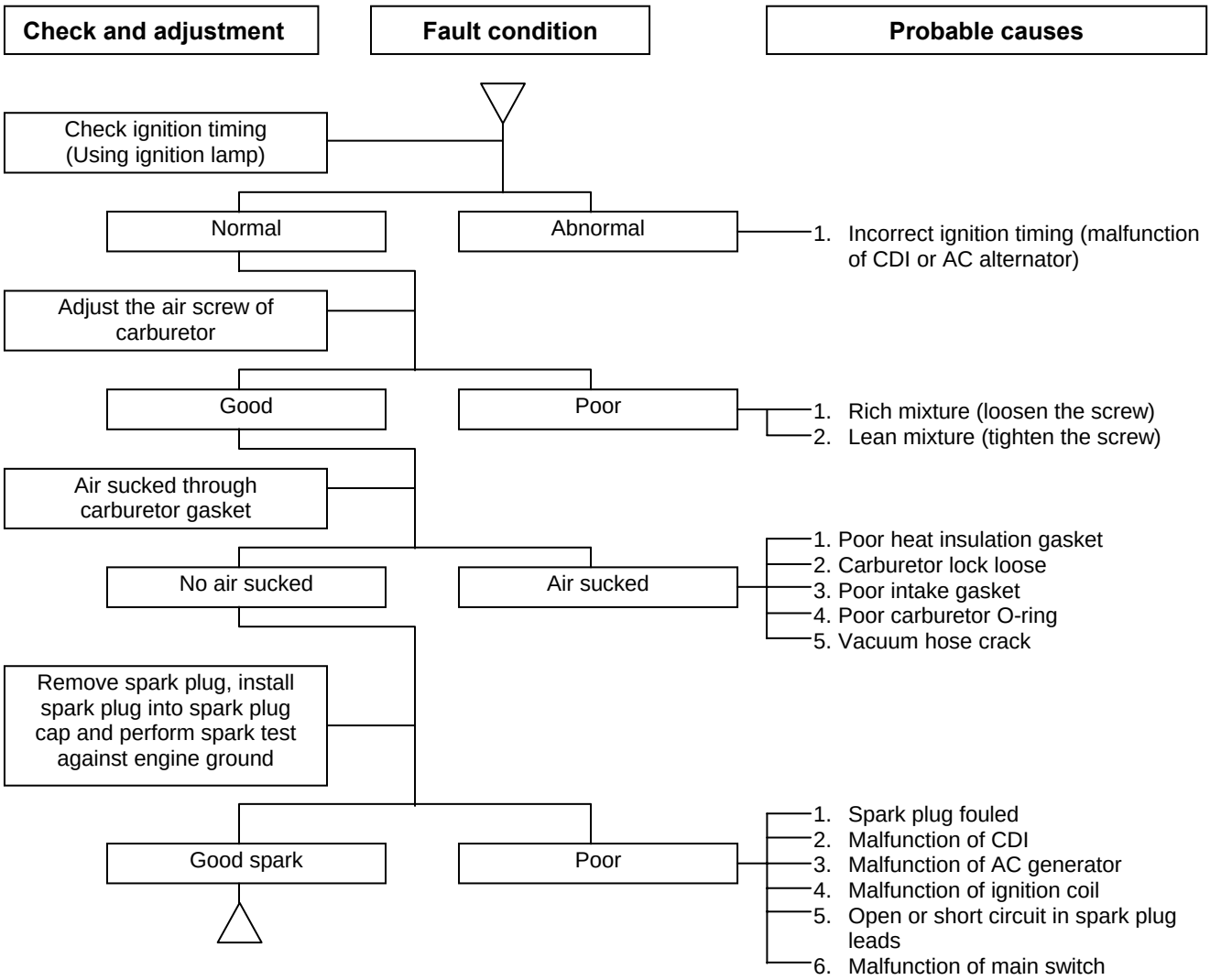

D. Engine runs sluggish (High speed)

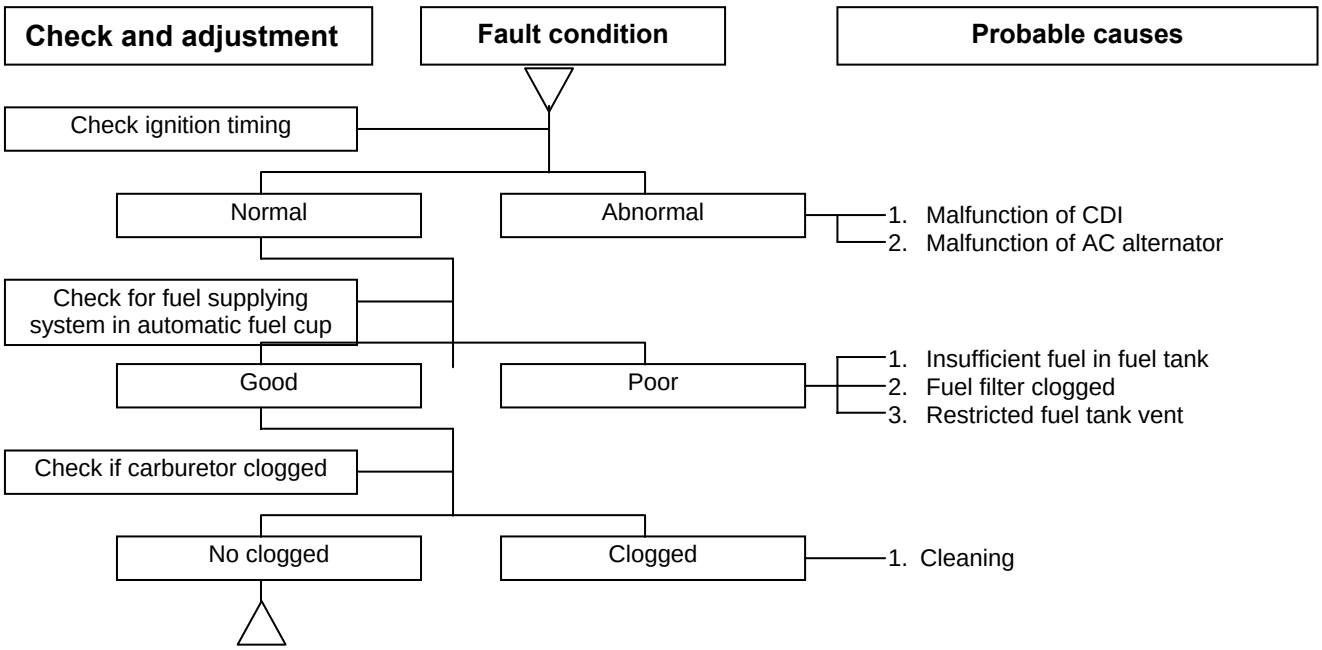

E. Clutch, Driving And Driving Pulley

FAULT CONDITIONS	PROBABLE CAUSES
Engine can be started but motorcycle can not be moved.	1. Driving belt worn out or deformation 2. Driving disk damaged 3. Driving pulley spring broken 4. Clutch ling broken 5. Driving slide-shaft gear groove broken 6. Transmission gear damaged
Engine running and misfire as motorcycle initial forward moving or jumping suddenly (rear wheel rotating as engine in running)	1. Clutch ling spring broken 2. Clutch outer cover stickled with clutch balance weights 3. Connection parts in clutch and shaft worn out or burned
Poor initial driving (Poor climbing performance)	1. Driving belt worn out or deformation 2. Balance weight roller worn out 3. Driving sliding gear shaft worn out 4. Driving disk spring deformation 5. Driving sliding gear shaft worn out 6. Greased in driving belt and sliding gear.

Lubrication Points

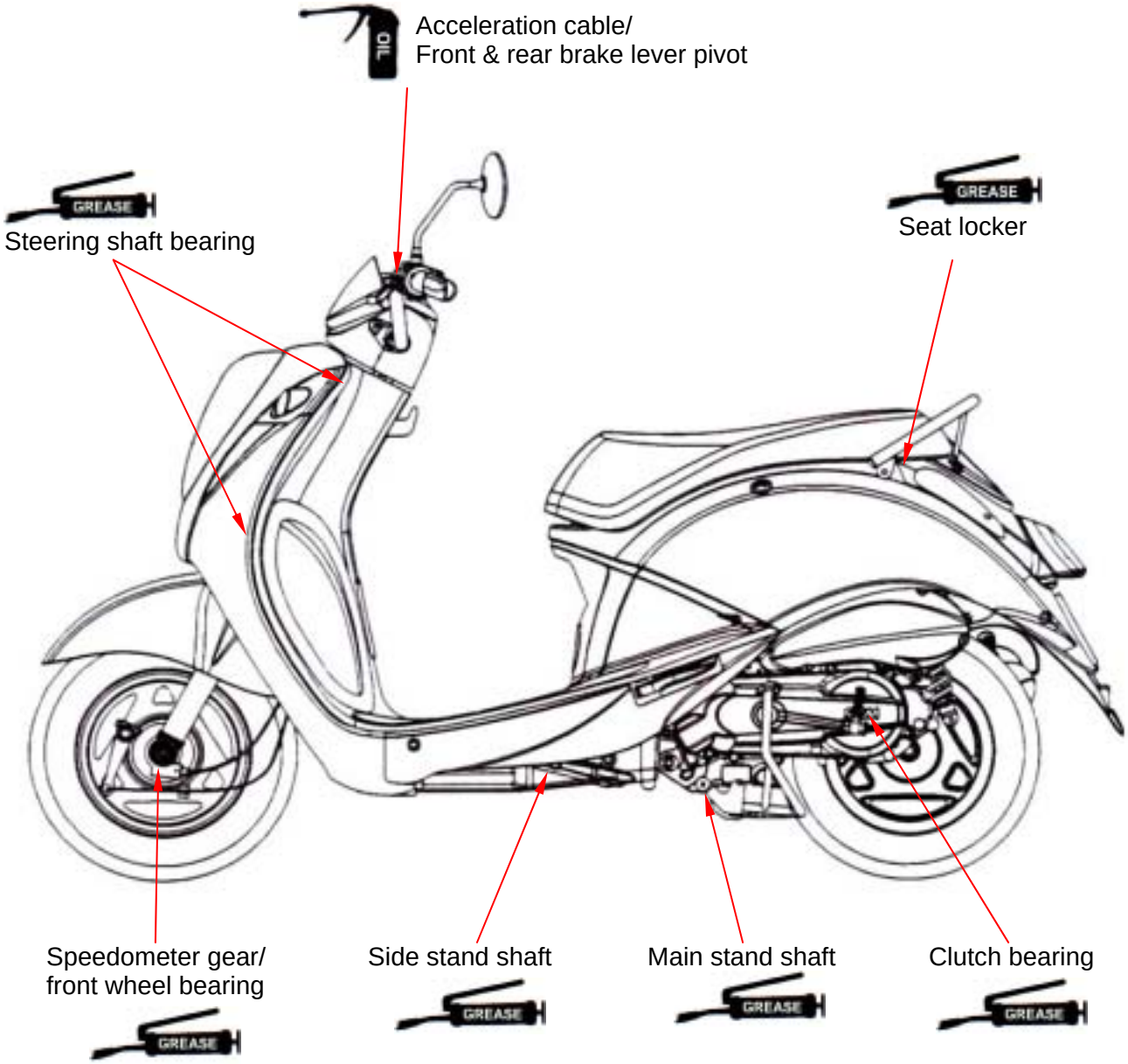

Note:

Precautions in Operation..... 2-1
Periodical Maintenance Schedule..... 2-2
Lubrication System 2-3
Fuel System 2-4
Air Cleaner 2-5
Throttle Valve Operation..... 2-5
Crankcase Blow-By Ventilation..... 2-6
Valve Clearance Adjustment 2-6
Carburetor Idle Speed Adjustment 2-7
Ignition System..... 2-8
Spark Plug..... 2-8
Cylinder Compression Pressure..... 2-9
Driving System 2-9
Steering System 2-10
Suspension System 2-10
Front Disk Brake System..... 2-11
Drum Brake System 2-13
Wheel / Tire 2-14
Battery..... 2-15
Headlight Adjustment 2-15
Nuts、Bolts Tightness..... 2-15
Special Service Tools Catalogue 2-16

Precautions in Operation

Specification

Model		HU05U	HU10U/W
Fuel Tank Capacity		4800c.c.	4800 c.c.
Engine Oil	capacity	800 c.c.	750 c.c.
	change	700 c.c.	600 c.c.
Transmission Gear oil	capacity	100 c.c.	110 c.c.
	change	90 c.c.	100 c.c.
Clearance of throttle valve		2~6 mm	
Spark plug		NGK C6HSA Clearance:0.6~0.7 mm	
〝F〞 Mark in idling speed		TDC 13º / 1700 rpm	TDC 13º / 1700 rpm
Full timing advanced		TDC 26º / 4000 rpm	TDC 22º / 4000 rpm
Idling speed		2000±100 rpm	1700±100 rpm
Cylinder compression pressure		9 kgf/cm²	12 kgf/cm²
Valve clearance	IN	0.05±0.02 mm	0.12±0.02 mm
	EX	0.1±0.02 mm	
Tire dimension	Front / Rear	3.00-10/ 90-90 10	90-90 10 50J
Tire pressure (cold)	single	Front:1.5 kg/cm² Rear:2.25 kg/cm²	Front:2.00 kg/cm² Rear:2.25 kg/cm²
	Two persons	Front:1.5 kg/cm² Rear:2.50 kg/cm²	Front:2.00 kg/cm² Rear:2.50 kg/cm²
Battery		12V4Ah (MF battery) YTX5L-BS / GTX5L-BS	
Play of drum brake lever		10~20 mm	

Periodical Maintenance Schedule

No	item	Initial 300KM	1 Month every 1000KM	3 month every 3000KM	6 month every 6000KM	1 year every 12000KM
1	☆Air cleaner	I		C	C	R
2	☆2nd air jet leaner	I		C	C	R
3	☆Fuel filter	I			I	R
4	☆Oil filter	C			C	C
5	☆Engine oil change	R	Replacement for every 1000km			
6	Tire pressure	I	I			
7	Battery inspection	I	I			
8	Brake & free play check	I	I			
9	Steering handle check	I	I			
10	Cushion operation check	I	I			
11	Every screw tightening check	I	I			
12	Gear oil check for leaking	I	I			
13	☆Spark plug check or change	I		I	R	
14	☆Gear oil change	R	Replacement for every 5000km			
15	Frame lubrication				L	
16	Exhaust pipe	I	I			
17	☆Ignition timing	I	I			
18	☆emission check in Idling	A	I			
19	☆Throttle operation	I		I		
20	☆Engine bolt tightening	I		I		
21	☆CVT driving device(belt)				I	R
22	☆CVT driving device(roller)				C	
23	Lights/electrical equipment/ mutli-meters	I	I			
24	Main/side stands & springs	I			I	
25	Fuel lines	I		I		
27	Shock absorbers	I		I		
28	Cam chain	I		A		
29	☆Valve clearance	I		C		
30	☆Crankcase vapor control System	I	Replacement for every 2000km			
31	☆Crankcase blow-by over-flow pipe	I		I	C	
32	☆2nd air jet system			I		

Code: I ~ Inspection, cleaning, and adjustment R ~ Replacement
C ~ Cleaning (replaced if necessary) L ~ Lubrication

The above maintenance schedule is established by taking the monthly 1000 kilometers as a reference which ever comes first.

Remarks:
1. These marks" ☆" in the schedule are emission control items. According to EPA regulations, these items must be perform normally periodical maintenance following the use r manual instructions. They are prohibited to be adjusted or repaired by unauthorized people. Otherwise, SYM is no responsible for the charge.
2. Clean or replace the air cleaner element more often when the motorcycle is operated on dusty roads or in the Heavily- polluted environment.
3. Maintenance should be performed more often if the motorcycle is frequently operated in high speed and after the motorcycle has accumulated a higher mileage.
4. Preventive maintenance
   a. Ignition system—Perform maintenance and check when continuous abnormal ignition, misfire, after-burn, overheating occur.
   b. Carbon deposit removal—Remove carbon deposits in cylinder head, piston heads, exhaust system when power is obvious lower. Than ever
   c. Replace worn out pistons, cylinder head.

Lubrication System

Engine Oil Capacity

Caution

- The vehicle must be parked on a level ground when checking oil capacity.
- Run the engine for 2-3 minutes then stop, wait about 2-3 more minutes allowing engine oil to settle before checking the oil level.

Remove dipstick to check the oil level. If oil level is below the lower limit mark, add oil to the specified upper limit mark.

Oil change

Shut off the engine and remove dipstick.
Remove the oil drain plug on the bottom-left of crankcase to drain oil.
After draining out oil, clean oil plug and its gasket and reinstall. Replace the gasket if it is damaged.
Torque value: 3.5~4.5kgf-m

Caution

- Warm up the engine. This will make the oil flow out easily.

Add oil to the specified capacity.
Oil Viscosity: SAE 10W-30, recommended using King-Mate serial oil.

Engine oil capacity:

Disassembly	**HU10U/W**	**750c.c.**
	HU05U	**800c.c.**
Change	**HU10U/W**	**650c.c.**
	HU05U	**700c.c.**

When checking for oil leak, run the engine at idle speed for a few minutes, then check oil capacity with dipstick.

Cleaning the oil strainer

Drain oil from engine, remove the strainer cover, spring and strainer.
If there is an accumulation on the screen, wash it off with suitable solvent (recommended using compressed air). Check O-ring for damage, replace if necessary.
Reinstall strainer, spring, O-ring and strainer cover.

Torque value: 1.3~1.7kgf-m

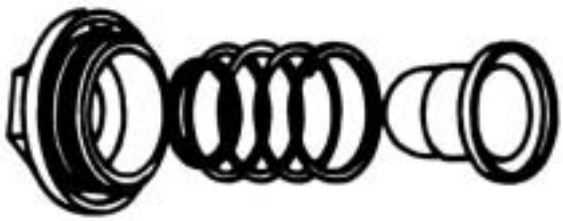

Gear Oil

Inspection

Check gear oil if leaking.
Park the motorcycle with main stand on flat level place.
Turn off engine and remove the gear oil draining plug.
Place a measurement cup under the draining hole.
Check gear oil if enough.

Replacement

At first, remove the gear oil refilling bolt, and then remove the draining plug. Install the draining plug after drained oil out.

Torque value: 0.8~1.2kgf-m

Caution

- Inspect if washer is in good condition. Replace it with new one if it was deformed or damaged.

Check if the seal washer is good, and replace it if deformed or damaged.

Torque value: 1.0~1.4 kgf-m

Quantity: HU10U/W 100 c.c.
HU05U 90 c.c.

Recommended: King-Mate HYPOID GEAR OIL (#140).

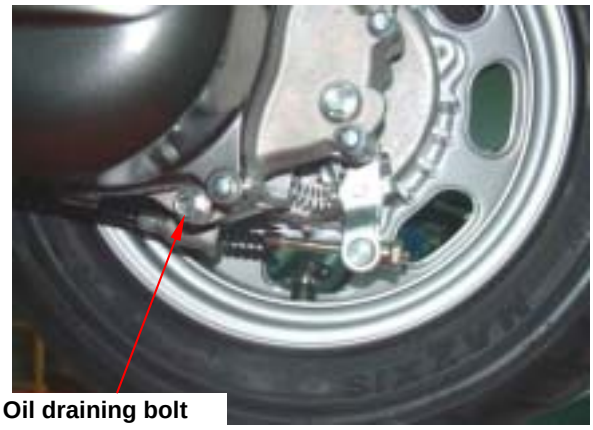

Fuel System

Fuel Lines

Remove trunk, side cover, central cover, body frame cover, and pedal, as well as front glove box
Check all lines, and replace it when they are deterioration, damage or leaking

Warning

- Gasoline is a low ignition material so any kind of fire is strictly prohibited as dealing.

Air Cleaner

Element

Remove the air cleaner cover (7 screws)

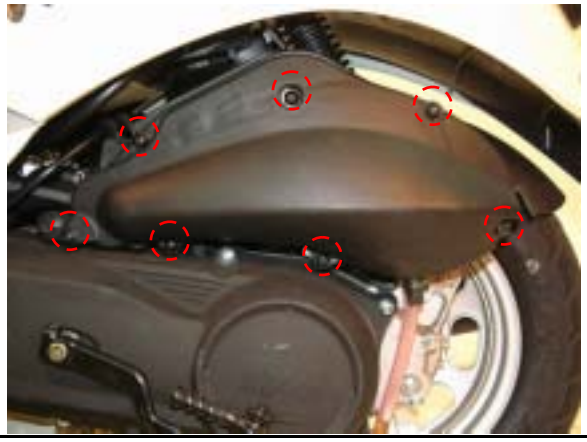

Remove element.
Check the element if dirt or damaged.
Replace it with new one if dirt or damaged.

Throttle Valve Operation

Have a wide open of throttle valve as handle bar in any position and release it to let back original (full closed) position.
Check handle bar if its operation is smooth.
Check throttle valve cable and replace it if deteriorated, twisted or damaged.
Lubricate the cable if operation is not smooth
Measure handle bar free play in its flange part.
Free play：2~6 mm

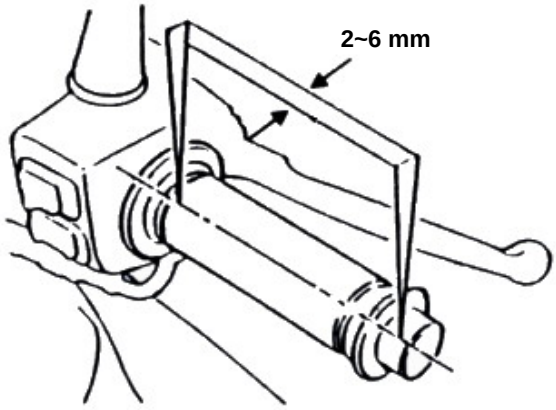

Adjustment can be done in either ends.
Secondary adjustment is conducted from top side.
Remove rubber boot, loosen fixing nut, and then adjust it by turning the adjustment nut.

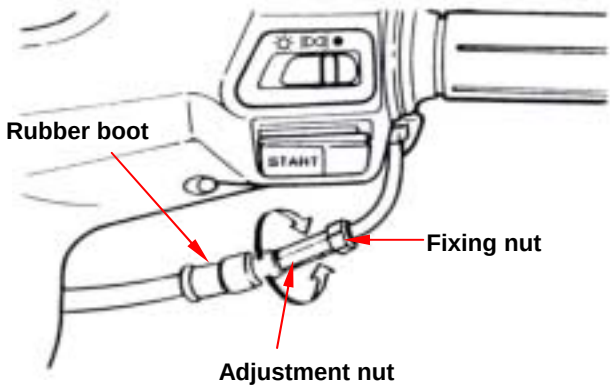

Primary adjustment is conducted from cable button side.
Loosen fixing nut, and adjust by turning the adjustment nut.
Tighten the fixing nut, and check acceleration operation condition.

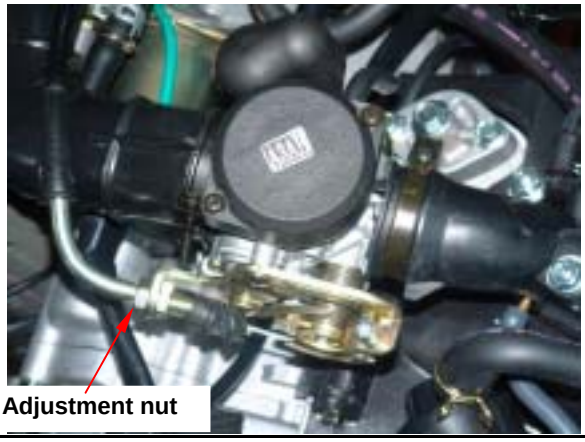

Crankcase Blow-By Ventilation

Pull out the plug from draining hose to clean deposits

Caution

- When always riding in rainy area or full throttle position, maintenance travel must be shorted. The deposits can be seen in the transparent section of draining hose.

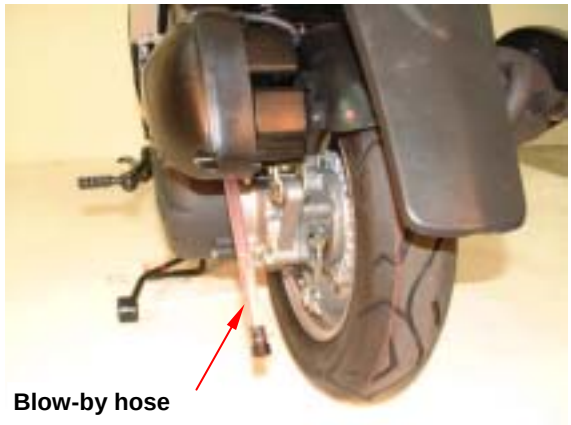

Valve Clearance Adjustment

Caution

- Checks and adjustment must be performed when engine is cold (below 35°C).

Remove trunk
Remove central cover
Remove cylinder head side-cap.
Remove the cooling fan cover.
With T type wrench, turn crankshaft in clockwise motion so that mark (T) on the generator flywheel aligns with the mark on the crankshaft, and camshaft is at TDC position also as same as level of cylinder head top-end. A single hole on camshaft sprocket is forward to up. (Piston is at TDC position in the compression stroke.)

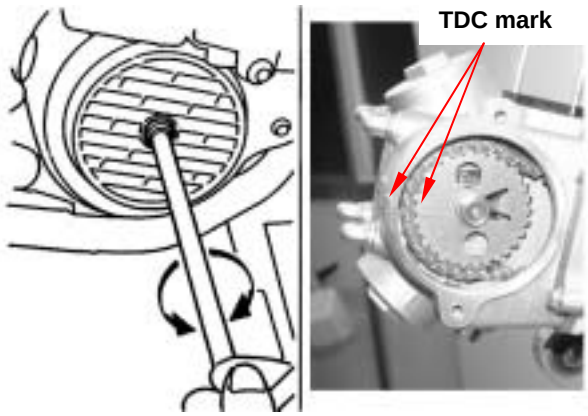

Caution

- The model that equipped with starting compression pressure reduction system can not be rotated in counter-clockwise to prevent from operating compression pressure reduction function so that valve clearance can not be measured.

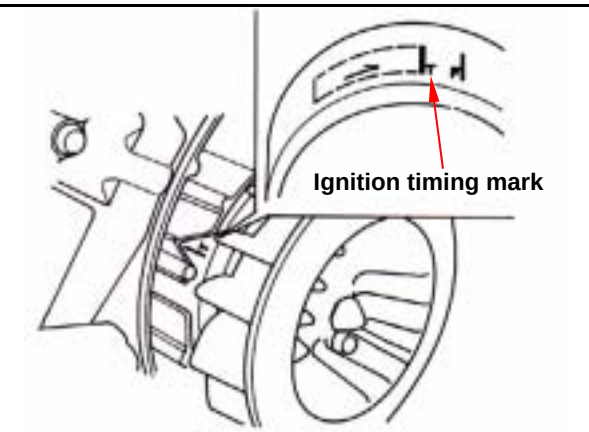

Valve clearance inspection and adjustment

Check & adjust valve clearance with feeler gauge after open the valve adjustment hole cap.

Valve clearance:

HU10U/W 0.12±0.02mm (IN/EX)

HU05U IN: 0.05±0.02mm EX: 0.10±0.02mm

Loosen fixing nut and turn the adjustment nut for adjustment.

Caution

- It has to make sure that valve rock-arm is be adjusted to standard level when adjusting it, and re-check the valve clearance after tightened the fixing nut.

Carburetor Idle Speed Adjustment

Caution

- Inspection & adjustment for idle speed have to be performed after all other parts in engine that needed adjustment have been adjusted.
- Idle speed check and adjustment have to be done after engine is being warn up. (around 10 minutes.)

Park the motorcycle with main stand and warn up engine.

Connect tachometer (the wire clamp of tachometer is connected to the high voltage coil).

Remove the trunk and seat cushion.

Turn the throttle valve stopper screw to specified idle speed.

Specified idle speed:

HU10U/W 1700±100 rpm

HU05U 2000±100 rpm

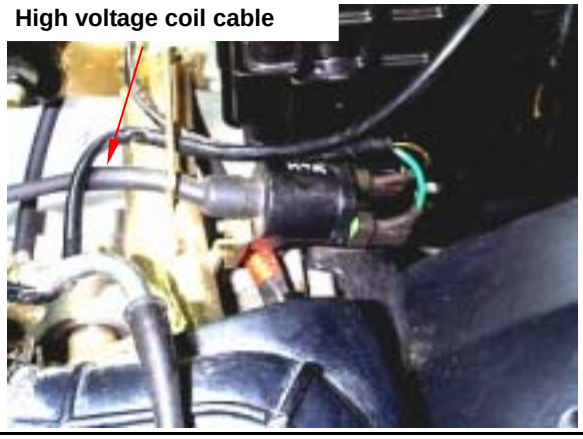

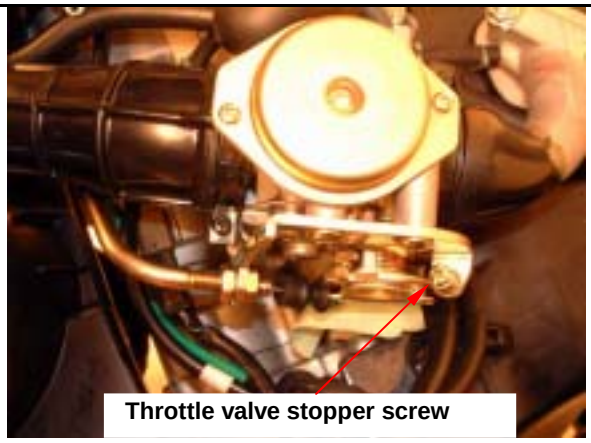

Emission adjustment in Idle speed

Warm up the engine for around 10 minutes and then conduct this adjustment.

1. Connect the tachometer onto engine.
2. Adjust the idle speed adjustment screw and let engine runs in 1700±100 rpm.
3. Insert the exhaust sampling pipe of exhaust analyzer into the front section of exhaust pipe. Adjust the air adjustment screw so that emission value in idle speed is within standard.
4. Slightly accelerate the throttle valve and release it immediately. Repeat this for 2~3 times.
5. Read engine RPM and value on the exhaust analyzer. Repeat step 2 to step 4 procedures until measured value within standard.

Emission standard: CO: below 3.0%

HC: below 2000 P.P.M.

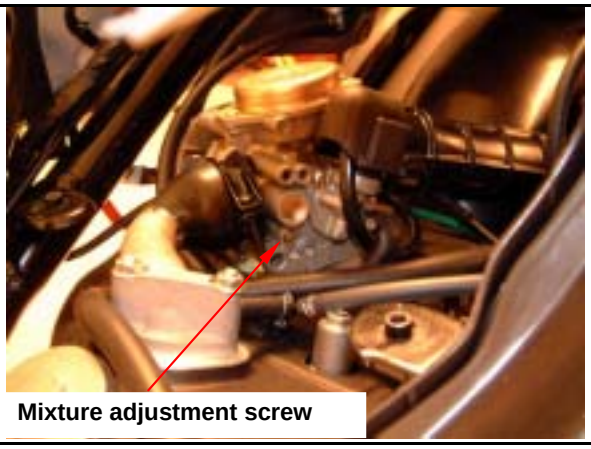

Ignition System

Ignition Timing

Caution

- C.D.I ignition system is set by manufacturer so it can not be adjusted
- Ignition timing check procedure is for checking whether CDI function is in normal or not.

Remove right side cover.
Remove ignition timing hole cap located on the cooling fan cap. Or remove the cooling fan cover.
Connect tachometer and ignition lamp.
Start engine
Set engine idle speed in1700 rpm, and if the mark aligns with the “F”, then it means that ignition timing is correct.
Increase engine speed to 4000 rpm to check ignition timing advance. If the detent aligns with advance mark “II”, then it means ignition timing advance is in functional. If not, check CDI set, pulse flywheel, and pulse generator. Replace these components if malfunction of these parts are found.

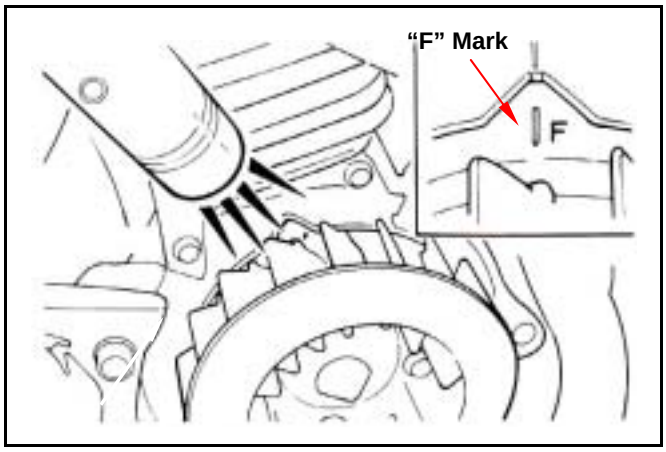

Spark Plug

Appointed spark plug：CR6HSA (NGK)
Remove luggage box.
Remove center cover
Remove spark plug cap
Clean dirt around the spark plug hole.
Remove spark plug
Measure spark plug gap
Spark plug gap：0.6~0.7 mm
Carefully bend ground electrode of the plug to adjust the gap if necessary
Hold spark plug washer and install the spark plug by screwing it.
Tighten the plug by turning 1/2 turn more with plug socket after installed.
Torque value: 1.0~1.2kgf-m
Connect spark plug cap.

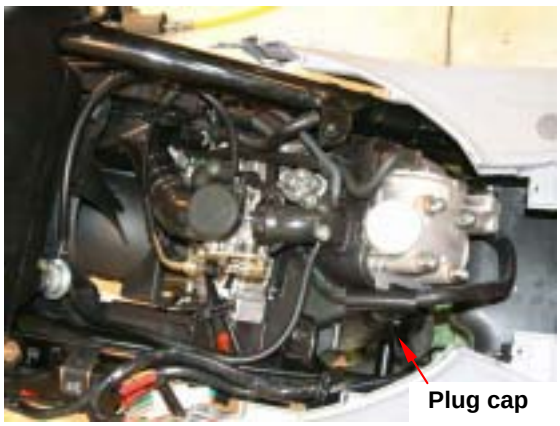

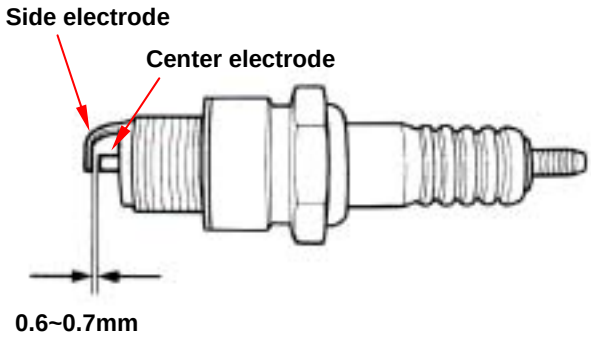

Cylinder Compression Pressure

Warn up engine and then turn off the engine.
Remove the trunk and the central cover.
Remove spark plug cap and spark plug
Install compression gauge
Full open the throttle valve, and rotate the engine by means of stepping the foot-starting lever

Caution

- Rotate the engine until the reading in the gauge no more increasing.
- Usually, the highest pressure reading will be obtained in 4~7 seconds.

Compression pressure:
HU10U/W 12±2 Kg/cm²
HU05U 9±2 Kg/cm²。

Check following items if the pressure is too low:
- Incorrect valve clearance
- Valve leaking
- Cylinder head leaking, piston, piston ring and cylinder worn out

If the pressure is too high, it means carbon deposits in combustion chamber or piston head.

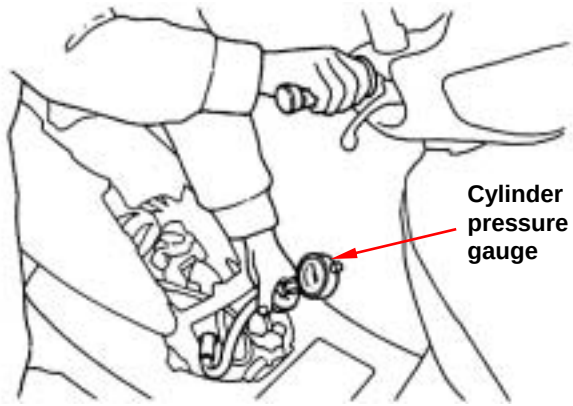

Driving System

DRIVING BELT

Remove left side cover
Remove mounting bolt located under air cleaner.
Remove 8 bolts of the engine left side cover and the cover
Check if the belt is crack or worn out.
Replace the belt if necessary or in accord with the periodical maintenance schedule to replace it.
Width limit: 16.5mm

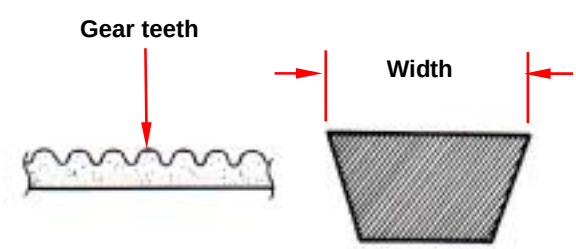

Clutch pad

Start the motorcycle and gradually increase throttle valve openness to check clutch pad operation.
If the motorcycle moves with shaking, then check its clutch pad for wearing.
Replace it if necessary.

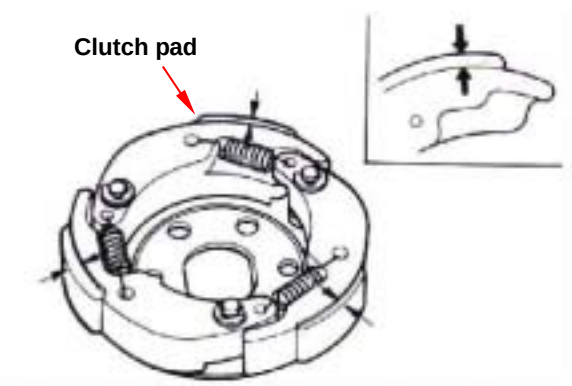

Steering System

Caution

- Check all wires and cables if they are interfered with the rotation of steering handle bar.

Lift the front wheel out of ground.
Turn handle from right to left alternative and check if turning is smoothly.
If handle turning is uneven and bending, or the handle can be operated in vertical direction, then adjust the handle top bearing.

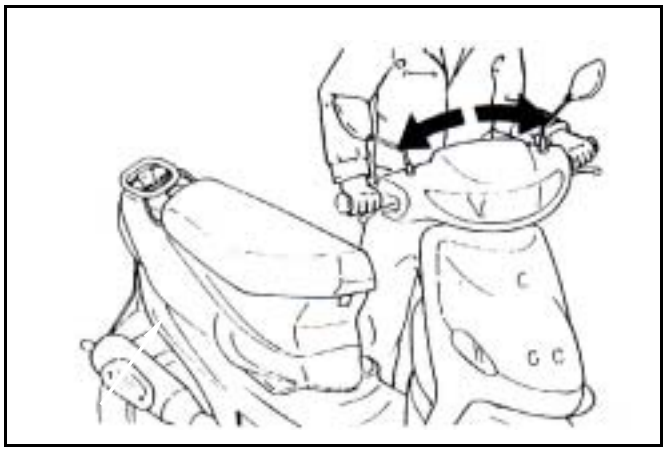

Suspension System

Caution

- Do not ride the motorcycle with poor shock absorber.
- Looseness, wear or damage shock absorber will make poor stability and drive ability.

Front shock absorber

Hold front brake lever and press down the front shock absorber for several times to check its operation.
Hold front brake lever and push forward the front shock absorber for several times to check its locking status.
Check if it is scratched or leaking.
Replace damaged and non-repairable components.
Tighten all nuts and bolts.

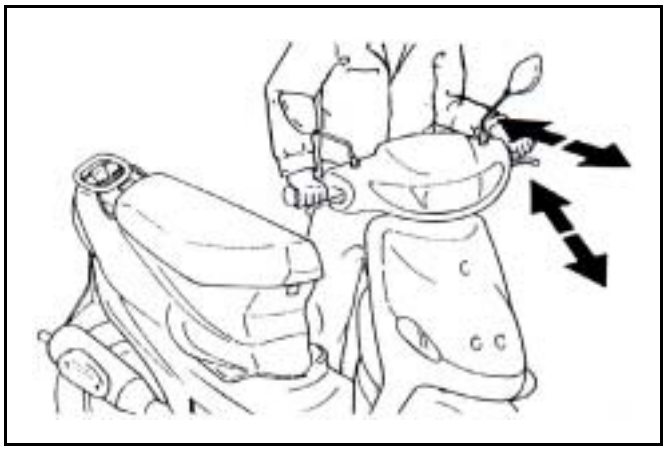

Rear Shock absorber

Press down the rear shock absorber for several times to check its operation.
Check if it is scratched or leaking.
Replace damaged and non-repairable components.
Park the motorcycle with main standard.
Start engine and let the rear wheel rotate after increased engine rpm.
Check engine for any parts loose or shaking.
Also check the engine suspension bushing for wear out. Replace the bushing if worn out.
Tighten all nuts and bolts.

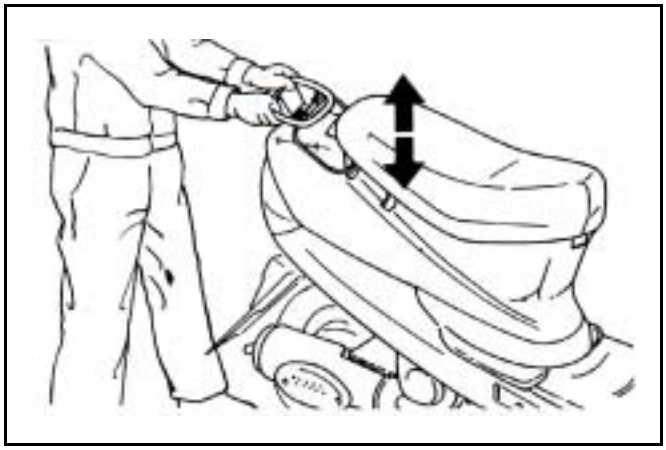

Front Disk Brake System

Brake System Hose

Make sure the brake hoses for corrosion or leaking oil.

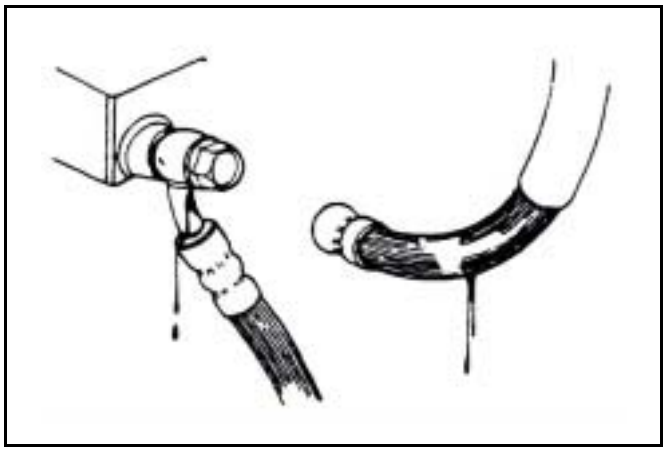

Brake Fluid

Check brake fluid level in the brake fluid reservoir. If the level is lower than the LOWER limit, add brake fluid to UPPER limit. Also check brake system for leaking if low brake level found.

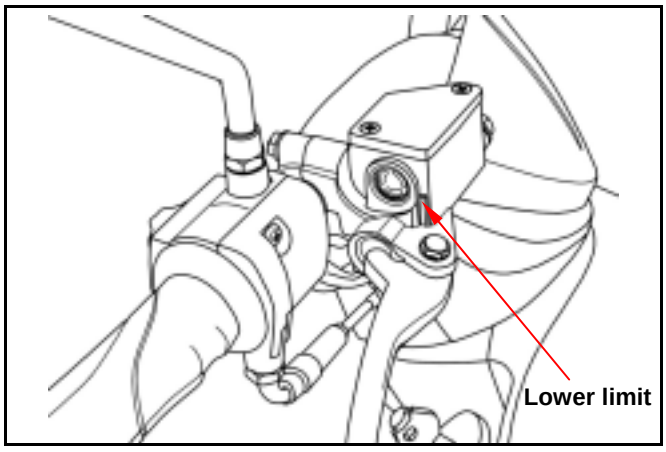

Caution

- In order to maintain brake fluid in the reservoir in horizontal position, do not remove the cap until handle bar stop.
- Do not operate the brake lever after the cap had been removed. Otherwise, the brake fluid will spread out if operated the lever.
- Do not mix non-compatible brake fluid together.

Filling Out Brake Fluid

Tighten the drain valve, and add brake fluid Operate the brake lever so that brake fluid contents inside the brake system hoses.

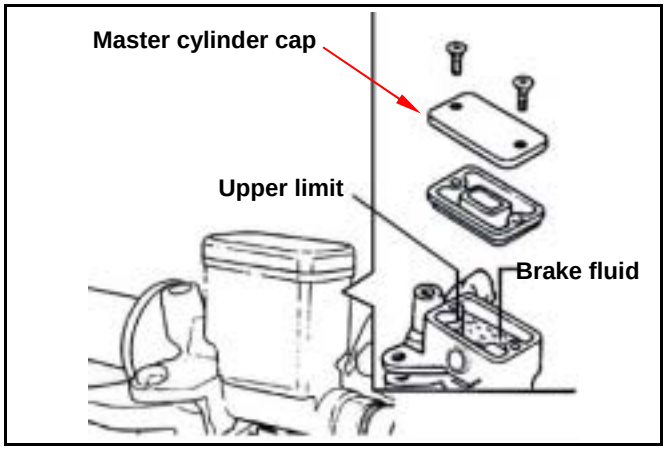

AIR BLEED OPERATION

Connect a transparent hose to draining valve. Hold the brake lever and open air bleeding valve. Perform this operation alternative until there is no air inside the brake system hoses.

Caution

- Before closing the air bleed valve, do not release the brake lever.

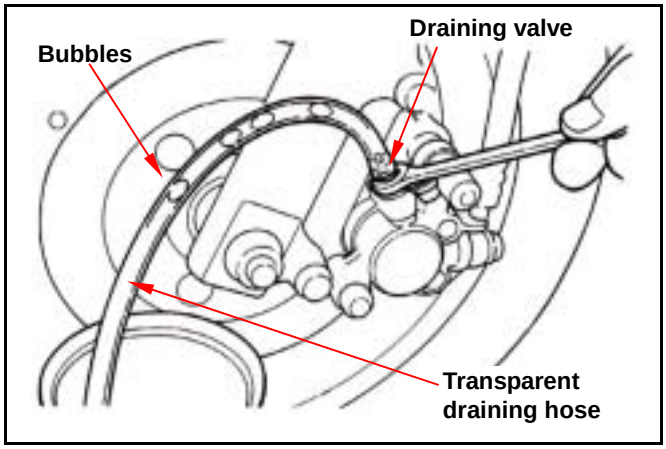

ADDED BRAKE FLUID

Add brake fluid to UPPER limit lever.
Recommended brake fluid: DOT3 or DOT4 WELL RUN brake fluid

Caution

- Never mix or use dirty brake fluid to prevent from damage brake system or reducing brake performance.

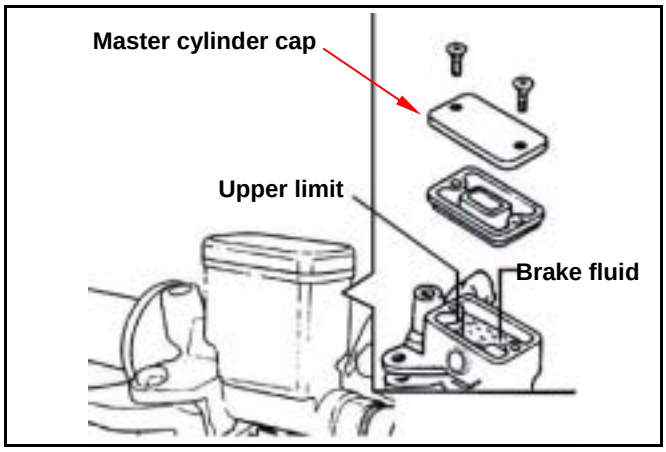

BRAKE LINING WEAR

The indent mark on brake lining is the wear limitation.
Replace the brake lining if the wear limit mark closed to the edge of brake disc.

Caution

- It is not necessary to remove brake hose when replacing the brake lining.

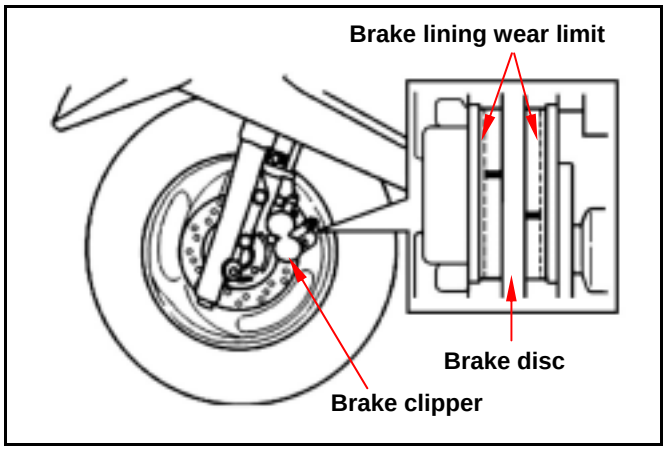

Remove the brake clipper bolt, and take out the clipper.

Caution

- Do not operate the brake lever after the clipper removed to avoid clipping the brake lining.

Pry out the brake lining with a flat driver if lining be clipped.

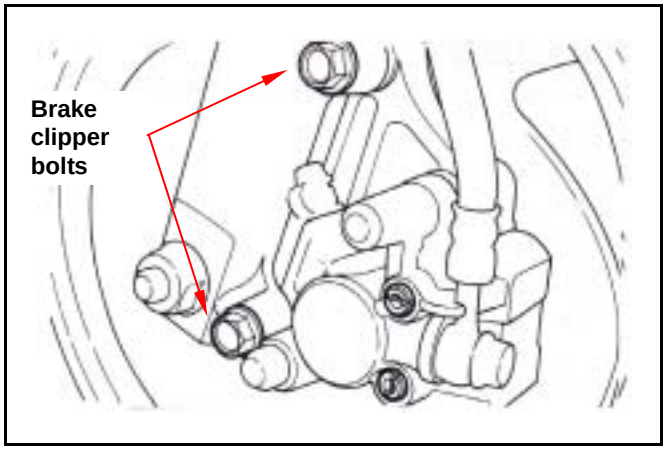

Remove brake lining bolt.

Take out the lining

Caution

- In order to maintain brake power balance, the brake lining must be replaced with one set.

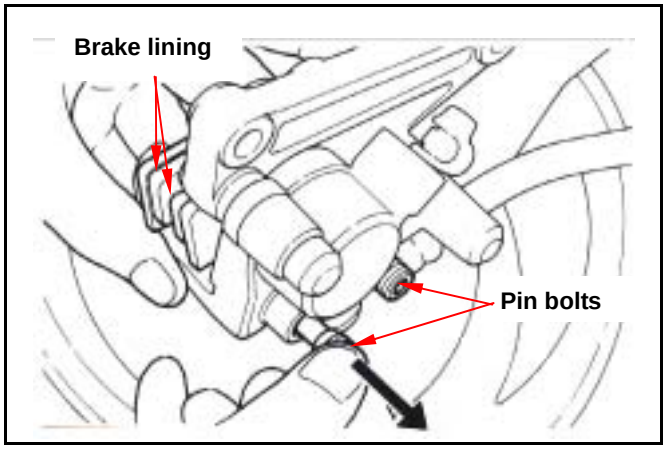

Drum Brake System

Front Brake Free Play: (Drum brake)

Measure free play of rear brake level at the end of the lever.

Free play: 10~20mm

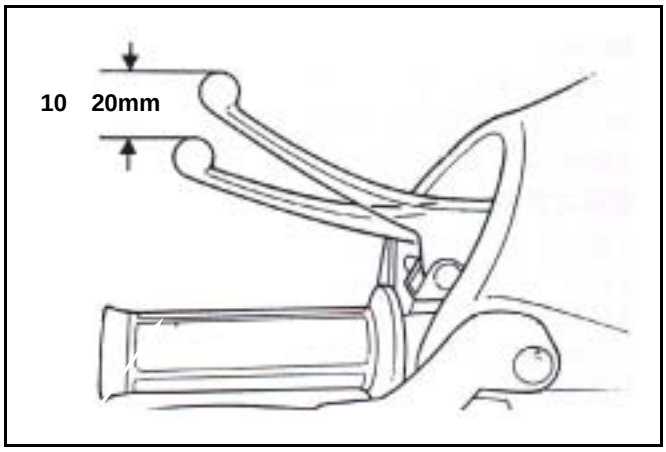

Adjust the free play by turning the front brake adjustment nut if necessary.

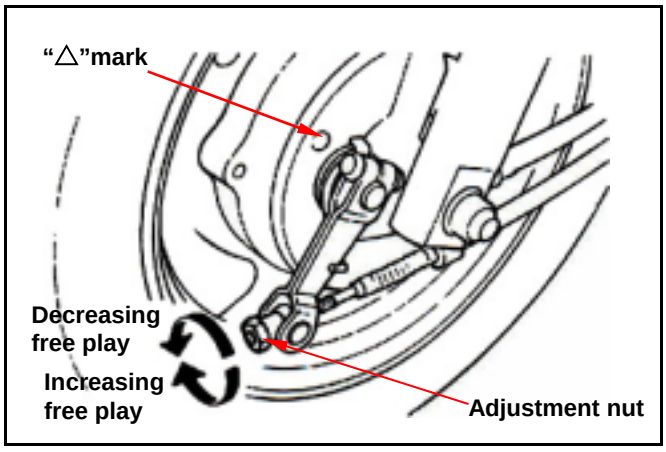

Rear Brake Free Play: (Drum Brake Type)

Measure the free [lay of the front brake lever at the end of the lever.

Free play: 10~20 mm

Adjust the free play by turning the front brake adjustment nut if necessary.

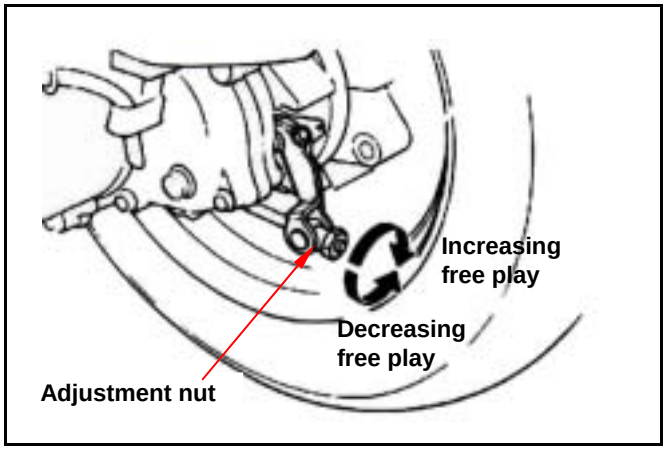

Brake Confirmation

⚠ Caution

- After brake adjustment, it has to check the brake operation to make sure the front and rear wheel can be braked.
- Pull the brake lever, and make sure that the wear limit marks of brake ling on the both front & rear brake arm are closer and touch to the △' marks. If so, replace the brake ling with new one.

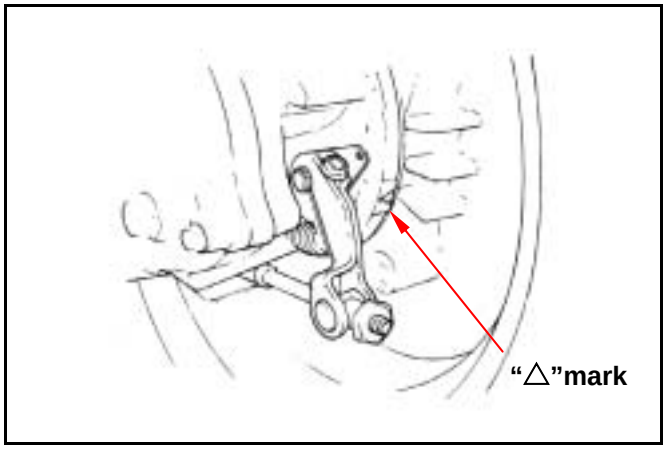

BRAKE LAMP SWITCH

The brake light switch lit up brake light as brake applied.
Make sure that electrical starter can be operated only under brake applying.

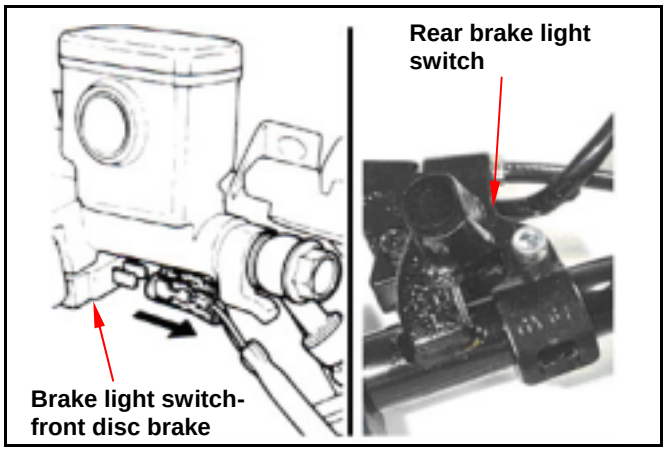

Wheel / Tire

Check if the tire pressure of front & rear wheel is within standard.

Caution

- Tire pressure check should be done as cold tire.

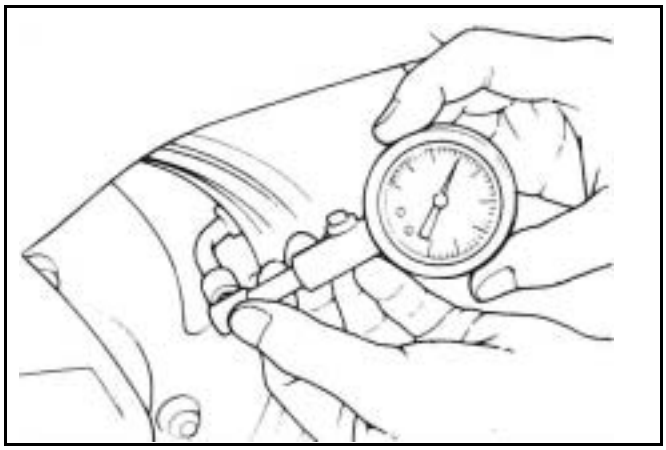

Appointed tire pressure (HU05U)

Tire size		Front tire	Rear tire
Tire pressure as cold tire (Kg/cm²)	Single	1.5	2.25
	Two persons	1.5	2.50

Appointed tire pressure (HU10U/W)

Tire size		Front tire	Rear tire
Tire pressure as cold tire (Kg/cm²)	Single	1.75	2.25
	Two persons	1.75	2.50

Appointed Tire:

HU05U Front/Rear wheel: 3.00-10/ 90-90 10

HU10U/W Front & Rear wheel: 90/90 50J

Check if tire surface is ticked with nails, stones or other materials.
Check if tire surface or wall for crack or damaged, and replace it if necessary.
The tire tread depth can be checked by visual inspection or depth gauge.

- Replace the tire if tire tread dent or unusual wearing out.
- The tire should be replaced if the wear limit mark "△" is in visible.

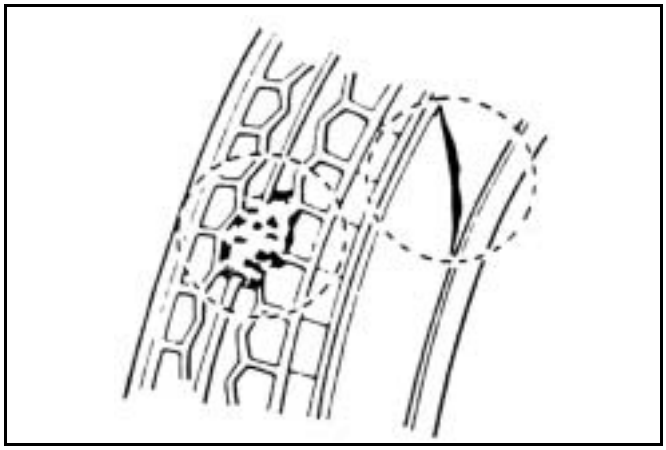

Measure tire thread depth from tire central surface.
Replace the tire if the depth is not come with following specification:

Front tire：1.5 mm
Rear tire：2.0 mm

Caution

- The wear limit marks "△" are located around the tire wall even for inspection.

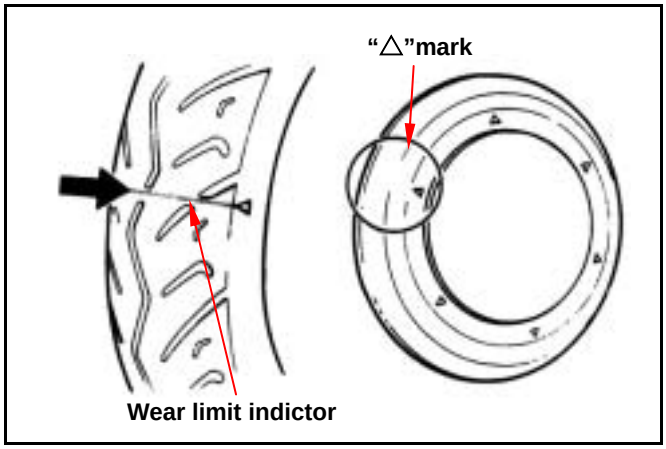

Battery

Battery Removal

Open the seat cushion and then the battery cap. (2 screws)

Battery cables removal:

1. At first, remove the negative "-" cable.
2. Then, remove the positive "+" cable
3. Remove the battery.

If there is some rust on battery posts, clean it with steel brush.
Install the battery in the reverse procedures of removal.

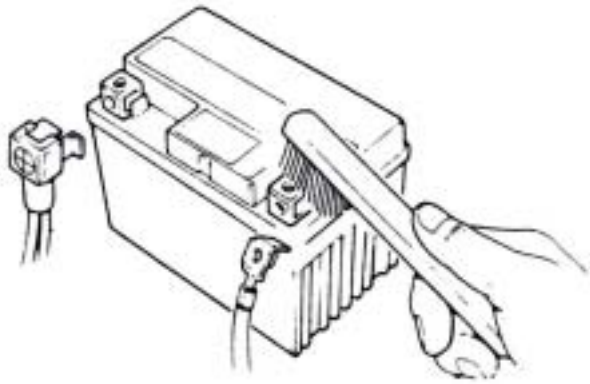

Caution

- If there is rust on the posts very serious, spray some hot water on the posts. Then, clean it with steel brush so that can remove rust for more easily.
- Apply some grease on the posts after rust removed to prevent from rust again.

Headlight Adjustment

Turn on main switch
Turn the headlight adjustment screw to adjust headlight beam height.

Caution

- To adjust the headlight beam follows related regulations.
- Improper headlight beam adjustment will make in coming driver dazzled or insufficient lighting.

Nuts、Bolts Tightness

Perform periodical maintenance in accord with the Periodical Maintenance Schedule
Check if all bolts and nuts on the frame are tightened securely.
Check all fixing pins, snap rings, hose (pipe) clamps, and wire holders for security.

Special Service Tools Catalogue

(ø28mm)		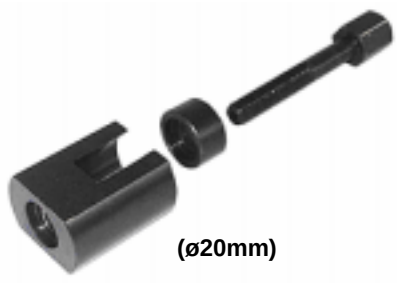 (ø20mm)			
Name	Puller/presser for crankcase bushing	Name	Puller/presser for crankcase bushing	Name	Valve spring compressor
Parts no.	SYM-1120310	Parts no.	SYM-1120320	Parts no.	SYM-1471110/20
Name	Valve spring compressor	Name	Valve clearance adjustment wrench	Name	Valve clearance adjuster
Parts no.	SYM-1471100	Parts no.	SYM-9001200	Parts no.	SYM-9001210
(25*37*6)		(20*32*6)		(27*42*7)	
Name	Oil seal tapping installer	Name	Valve spring compressor	Name	Valve spring compressor
Parts no.	SYM-9121600	Parts no.	SYM-9120200	Parts no.	SYM-9125500
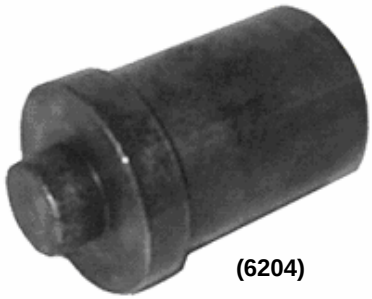 (6204)		(6301)		(6203/6004UZ)	
Name	Bearing installer	Name	Bearing installer	Name	Bearing installer ψ17mm
Parts no.	SYM-9110400	Parts no.	SYM-9610000	Parts no.	SYM-9620000

Name	Bearing remover (inner type)	Name	Bearing remover (outer type)	Name	clutch spring compressor
Parts no.	SYM-6204002	Parts no.	SYM-6204001	Parts no.	SYM-2301000
Name	Clutch mounting nut wrench	Name	Universal fixer	Name	Alternator flywheel remover
Parts no.	SYM-9020200	Parts no.	SYM-2210100	Parts no.	SYM-3110A01
Name	Cylinder head/oil filter cap wrench	Name	Valve rocker arm puller		
Parts no.	SYM-ALL23461	Parts no.	SYM-1445100-A1A		

NOTE:

Mechanism Illustrations ····· 3-1
Operational Precautions ····· 3-2
Trouble Diagnosis ····· 3-2
Engine OIL ····· 3-3
Cleaning Engine Oil Strainer ····· 3-4
Oil Pump ····· 3-5
Gear Oil ····· 3-8

Mechanism Illustrations

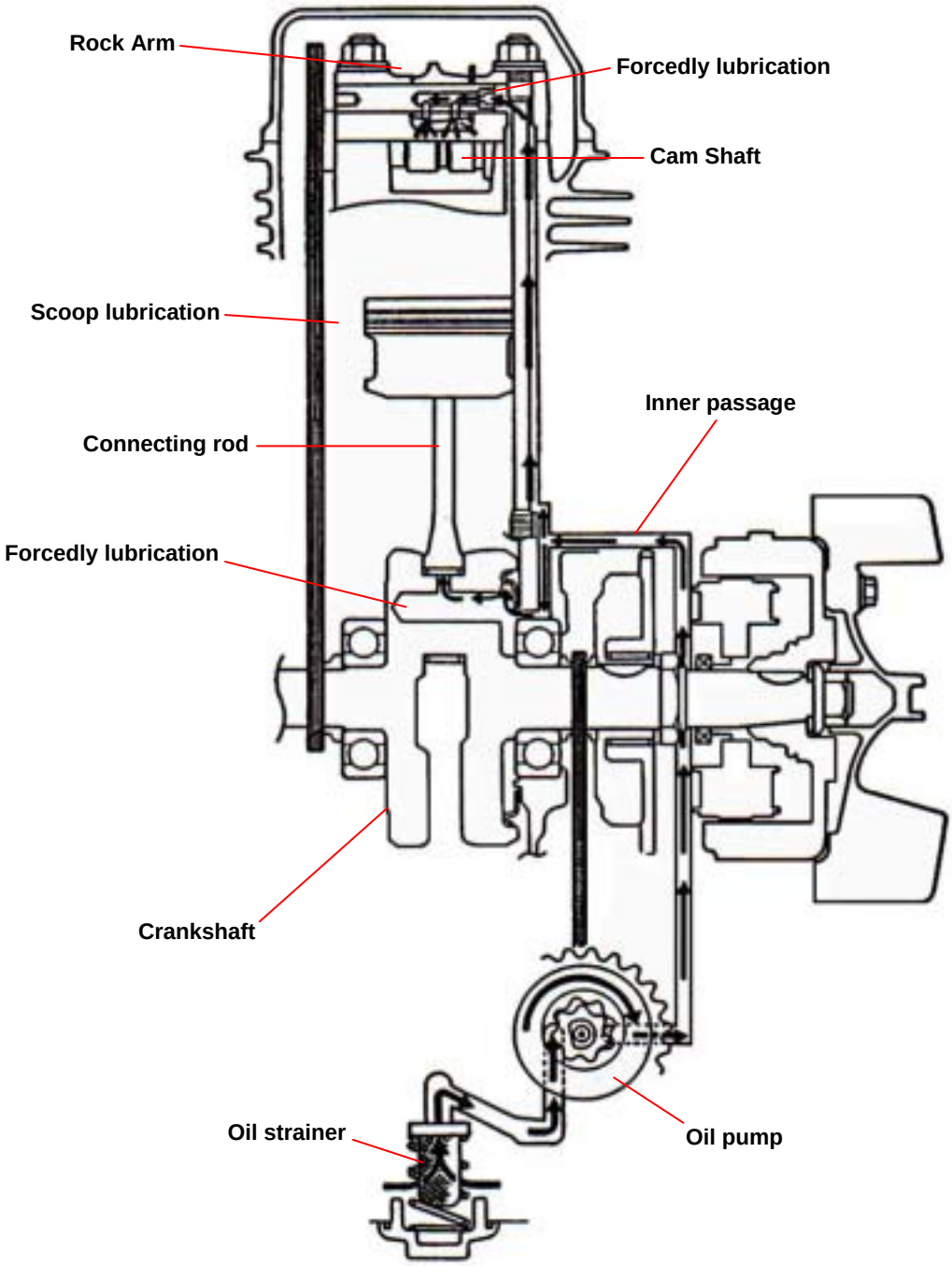

Operational Precautions

General Information

- This chapter contains maintenance operations for the engine oil pump, engine oil and gear oil.

Specifications

Engine oil quantity

Disassembly: HU10U/W 750c.c.
HU05U 800c.c.
Replacement: HU10U/W 650c.c.
HU05U 700c.c.
Oil viscosity: SAE 10W-30 or equivalent
(Recommended King-Mate serial oils)

Gear Oil

Disassembly: HU10U/W 110c.c.
HU05U 100c.c.
Replacement: HU10U/W 100c.c.
HU05U 90c.c.
Oil viscosity of gear oil: SAE 85W-140
(Recommended King-Mate gear oil series
SYM HYPOID GEAR OIL)

Oil viscosity

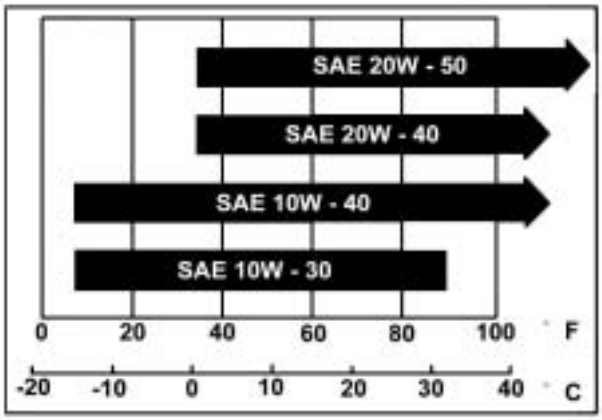

Unit: mm

Items		Standard(mm)	Limit(mm)
Oil pump	Inner rotor clearance	-	0.12
	Clearance between outer rotor and body	-	0.12
	Clearance between rotor side and body	0.05~0.10	0.20

Torque value

Oil draining plug	3.5~4.5kgf-m
Oil screen cap	1.3~1.7kgf-m
Gear oil draining bolt	0.8~1.2kgf-m
Gear oil filling bolt	1.0~1.4kgf-m
Oil pump connection screw	0.1~0.3kgf-m

Special Service Tools

Strainer cap wrench SYM-ALL12361
One way clutch socket SYM-9020100
Universal fixer SYM-2210100

Trouble Diagnosis

Low engine oil level

Oil leaking
Valve guide or seat worn out
Piston ring worn out

Dirty oil

No oil change in periodical
Cylinder head gasket damage
Piston ring worn out

Low Oil Pressure

Low engine oil level
Clogged in oil strainer, circuits or pipes
Oil pump damage

Engine OIL

Turn off engine, and park the motorcycle in flat surface with main stand.
Check oil level with oil dipstick
Do not screw the dipstick into engine as checking.
If oil level is nearly low level, fill out recommended oil to upper level.

Oil Replacement

Caution

- Drain oil as engine warmed up so that make sure oil can be drained smoothly and completely.

Place an oil pan under the motorcycle, and remove oil strainer cap.
Make sure if the aluminum washer of the draining bolt is damaged. If so, replace it with new one.
Install the drain bolt and tighten it.
Torque value: 3.5~4.5kgf-m

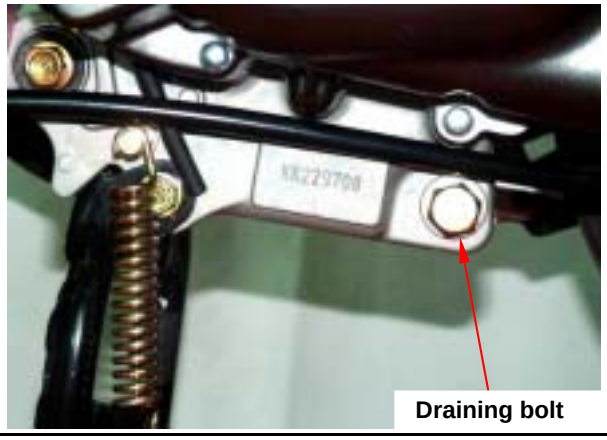

Engine oil replacement quantity:

HU10U/W	**650c.c.**
HU05U	**700c.c.**

Cleaning Engine Oil Strainer

Remove the oil strainer cap.
Remove oil strainer and spring
Clean oil strainer (recommended using compressed air to clean dirty foreign.)
Check if the strainer and O-ring of the oil strainer are broken. Replace with new one if found.
Install the oil strainer and spring.
Install the oil strainer cap and tighten it.
Special Service Tools:
Strainer cap wrench SYM-ALL12361
Torque value：1.3~1.7kgf-m
Fill out oil to the oil filler (Oil viscosity SAE 10W-30)
(Recommended King-Mate serial oils)

After oil replaced, insert ignition key into the re-set bottom under instrument panel so that the oil indicator is changed from red to green and set oil replacement mileage to zero.
Install dipstick, start the engine for running several minutes.
Turn off engine, and check oil level again if within standard level after 3-5 minutes.
Check if engine oil leaks.

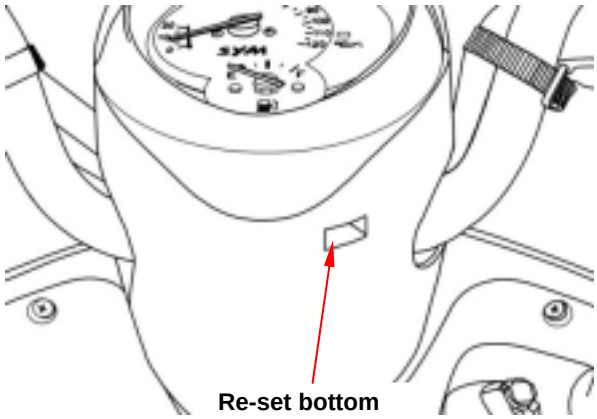

Oil Pump

Oil Pump Removal

Remove the alternator (refer to chapter 10).
Remove the engine right cover.
Remove the one-way clutch and starting gear (1 nut)

Special Service Tools:
One way clutch socket SYM-9020100
Universal fixer SYM-2210100

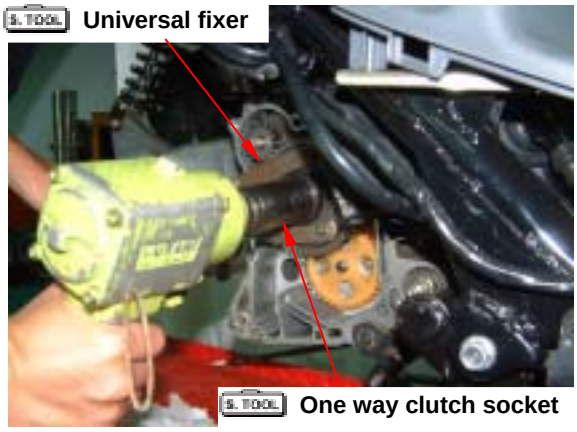

Make sure that the pump axle can be rotated freely.
Remove the oil pump cover (2 screws).

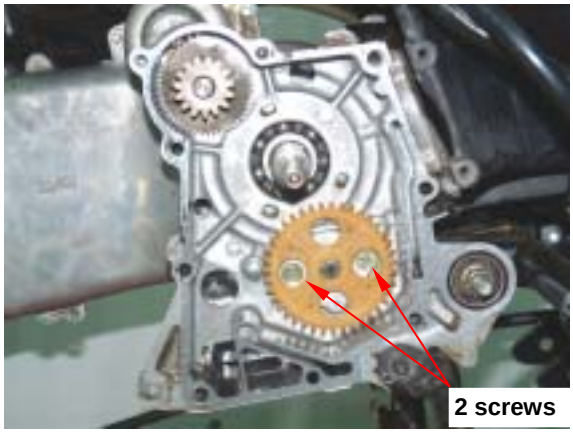

Remove the oil pump.

Oil Pump Disassembly

Remove the oil pump screw (1 screw) Take out the oil pump cover, inner & outer rotors. Check these parts after cleaned.

Oil Pump Inspection

Check the clearance between oil pump body and outer rotor

Limit：below 0.12mm

Check clearance between inner and outer rotors.

Limit：below 0.12mm

Check clearance between rotor side face and pump body

Limit：below 2.0 mm

Oil Pump Re-assembly

Install inner and outer rotors into the pump body
Align the indent on driving shaft with that of inner rotor. Install the driving shaft
Install the oil pump cover and fixing pin properly and then tighten screw. (1 screw)

Install driving gear and clamp.

Caution

- Make sure if the oil pump can be rotated smoothly.

Oil Pump Installation

Install the oil pump (2 screws).

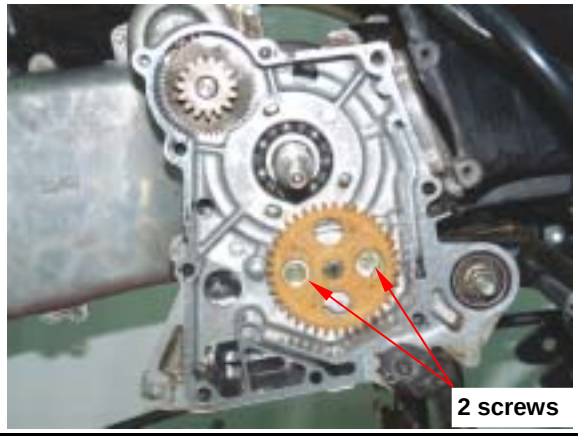

Install oil pump drive gear.

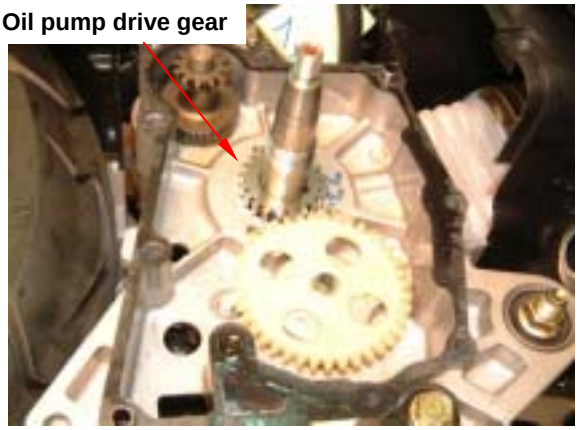

Install the one-way clutch and starting gear (1nut)
Install the engine right cover.
Install the alternator (refer to chapter 10).
Special Service Tools:
One way clutch socket SYM-9020100
Universal fixer SYM-2210100

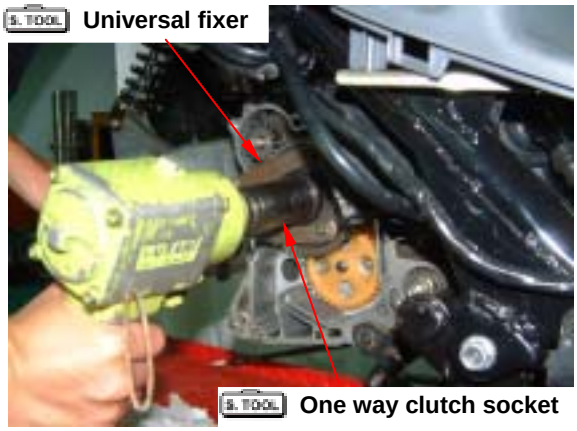

Gear Oil

Oil Level Inspection

Park the motorcycle on flat surface with main stand
Turn off engine and remove both engine oil filling bolt and oil draining plug.

Remove gear oil filling hole bolt and place a measurement cup under the draining plug.
Remove the oil draining plug and the pour gear oil into the measurement cup. Measure the gear oil quantity if within standard value. Add specified gear oil if the oil level too low.

Standard quantity:

HU10U/W 110c.c. / replacement: 100c.c.
HU05U 100c.c. / replacement: 90c.c.

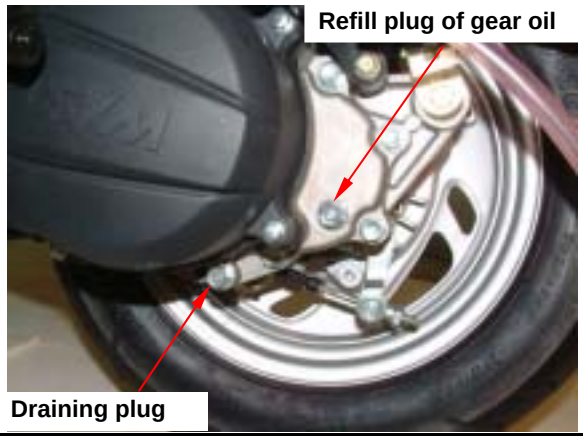

Gear Oil Replacement

Remove the gear oil filling bolt and its draining plug and then drain oil completely.
Install the draining plug and tighten it (Make sure if the plug washer is damaged. If so, replace it with new one.)

Torque Value：0.8~1.2kgf-m

Add new gear oil from the gear oil filling hole and then install the gear oil filling hole bolt after added oil. And then, tighten the bolt.

Torque Value：1.0~1.4kgf-m

※Recommended to apply with SYM HYPOID GEAR OIL (SAE 85W-140)

Start engine and run it for 2~3 minutes.
Turn of f engine and check if oil leaking.

Mechanism Illustration 4-1
Operational Precautions.....4-2
Trouble Diagnosis 4-3
Carburetor.....4-4
Idle Speed Adjustment 4-8
Fuel Tank 4-9
Air Cleaner..... 4-11

Mechanism Illustration

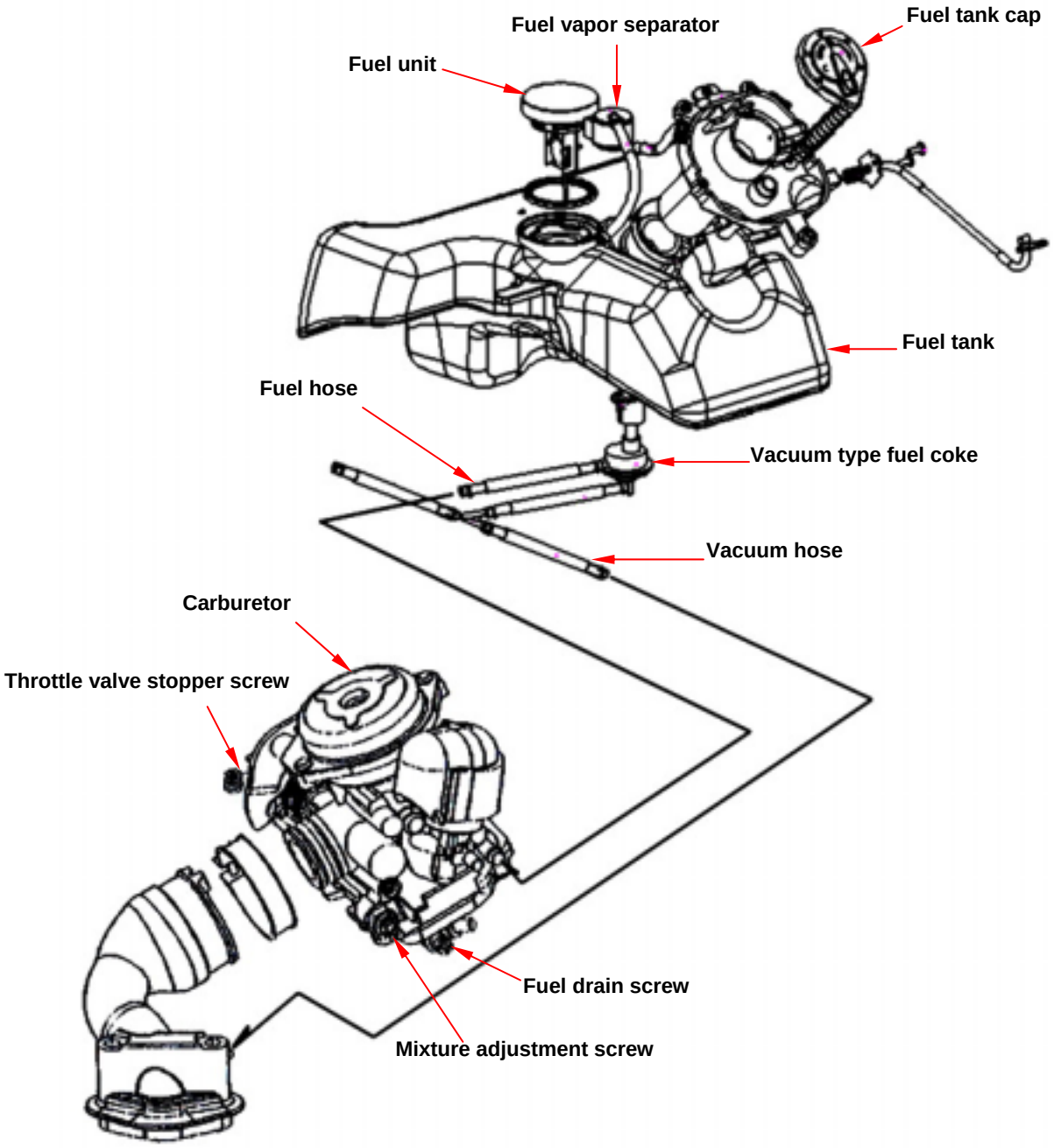

Operational Precautions

General Information

Warning

Gasoline is a low ignition point and explosive materials, so always work in a well-ventilated place and strictly prohibit flame when working with gasoline.

Caution

- Do not bend or twist throttle valve cable. Damaged cable will make unstable drive ability.
- When disassembling fuel system parts, pay attention to O-ring position, replace with new one as re-assembly
- There is a drain screw in the float chamber for draining residual gasoline.
- Do not disassemble automatic by-starter and air cut-off valves arbitrarily.

Specification

Item	Specification	
	HU10U/W	HU05U
Venturi diameter	20 mm	16.6 mm
I.D. number	049B	001
Fuel level	16.0mm	17.75mm
Main injector	# 95	# 88
Idle injector	# 38	# 35
Idle speed	1700±100 rpm	2000±100 rpm
Throttle handle free play	2~6 mm	2~6 mm
Fuel quantity adjustment screw	2 5/8±3/4 turns	2±1/2 turns

Torque value

Fuel valve tightening nut: 1.5~2.0Kgf-m

Special service tools

Vacuum/air pressure pump

General service tools

Fuel level gauge

Trouble Diagnosis

Poor engine start

- No fuel in fuel tank
- Clogged fuel tube
- Too much fuel in cylinder
- No spark from spark plug (malfunction of ignition system)
- Clogged air cleaner
- Malfunction of automatic by-starter
- Malfunction of throttle valve operation

Stall after started

- Malfunction of automatic by-starter
- Incorrect ignition timing
- Malfunction of carburetor
- Dirty engine oil
- Air existing in intake system
- Incorrect idle speed

Rough idle

- Malfunction of ignition system
- Incorrect idle speed
- Malfunction of carburetor
- Dirty fuel

Intermittently misfire as acceleration

- Malfunction of ignition system

Late ignition timing

- Malfunction of ignition system
- Malfunction of carburetor

Power insufficiency and fuel consuming

- Fuel system clogged
- Malfunction of ignition system

Mixture too lean

- Clogged fuel injector
- Vacuum piston stick and closed
- Malfunction of float valve
- Fuel level too low in float chamber
- Clogged fuel tank cap vent
- Clogged fuel filter
- Obstructed fuel pipe
- Clogged air vent hose
- Air existing in intake system

Mixture too rich

- Clogged air injector
- Malfunction of float valve
- Fuel level too high in float chamber
- Malfunction of automatic by-starter
- Dirty air cleaner

Carburetor

Carburetor Removal

Remove the luggage box and seat.
Loosen the adjustment nut and fixing nut of throttle valve cable, and release the cable from carburetor.
Remove fuel pipe, vacuum hose.
Remove air cut-off valve hose
Disconnect automatic by-starter connectors.
Release the clamp strip of air cleaner.
Release the clamp strip of carburetor isolator.
Take the carburetor out.

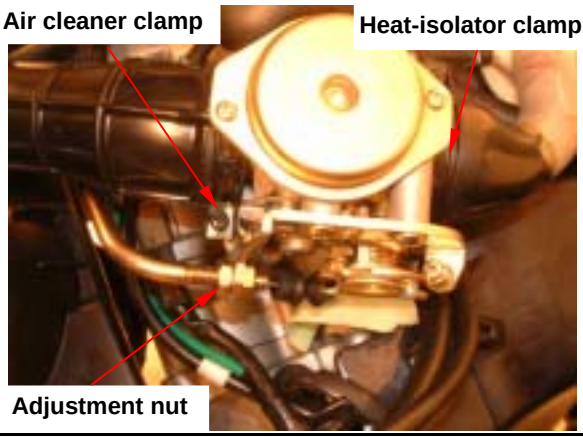

Vacuum Chamber Removal

Loosen drain screw, and drain out residual fuel in float chamber.
Remove screws (2 screws) of vacuum chamber cover and the cover.

Remove compress spring and vacuum piston.

Remove fuel needle seat, spring, and injector needle.
Check if the vacuum piston for wear out, crack or other damage.
Check if the diaphragm for damage or crack.

Caution

- Do not damage vacuum diaphragm.

Installation

Install in reverse order of removal procedures.

Air Cut-off Valve

Removal

Removal the throttle cable seat (screws x 2)

Remove the screws (screw x 2) of the air cut-off valve and its cover.

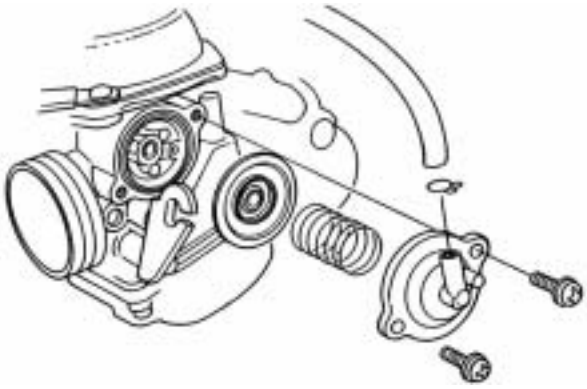

Remove the spring and vacuum diaphragm.

Check if the diaphragm for deterioration or crack.

Installation

Install the valve as reverse order of removal.

Caution

- Do not damage the vacuum diaphragm or in opposite installation direction.

AUTOMATIC BY-STARTER

Inspection

Turn off engine and waiting for over 10 minutes for cooling.
Check resistance across the two terminals of the automatic by-starter.
Resistance value: Max. 10Ω (Measured after engine stopped for more than 10 minutes)
Replace the automatic by-starter with a new one if resistance value exceeds standard.

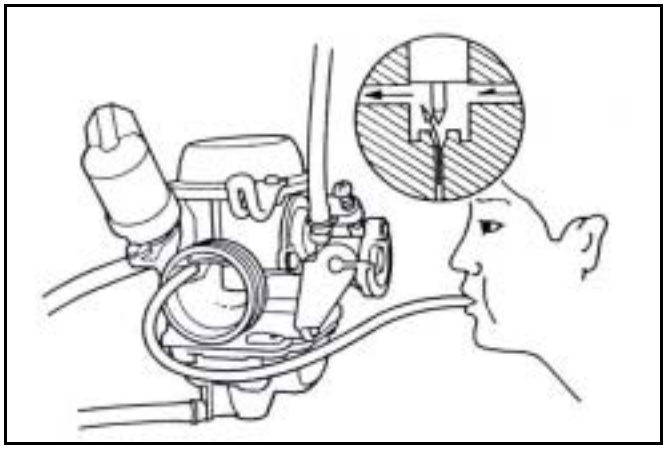

Remove the carburetor, allow it to cool off for 30 minutes.
Connect a pressure tester form air pump.
Connect fuel rich circuit.
Pump compressed air to the circuit.
Replace the automatic by-starter if the circuit clogged.

Connect battery posts (12V) to starter's connectors. After 5 minutes, test the rich circuit with compressed air.
If air flow through the circuit, then replace the by-starter.

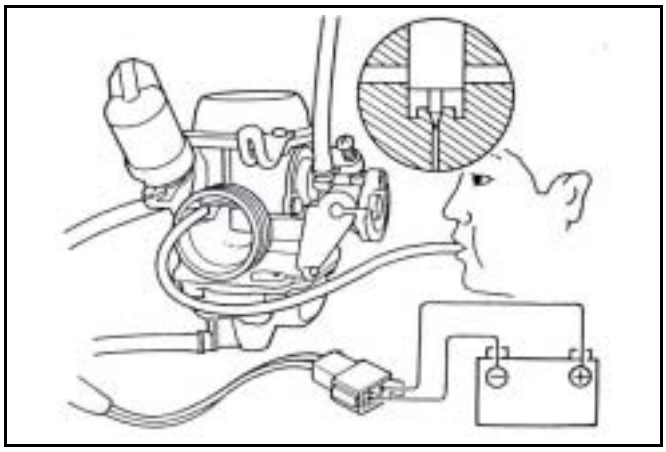

Removal

Remove fixing plate screw, and then remove the plate and automatic by-starter from carburetor.

Valve inspection

Check if automatic by-starter and valve needle for damage or wear out.

Installation

Install automatic by-starter to the carburetor body.
Install fixing plate to the upper groove of automatic by-starter, and install its flat surface to carburetor.
Install screw and tighten it.

Caution

- Align the round point of the starter with the screw hole of air intake side.

FLOAT CHAMBER

Disassembly

Remove 4 mounting screws and then the float chamber cover.

Remove the float pin and float valve.

Checking

Check float needle valve and valve seat for drop difference damage, wear out, dirty or clogged.

Caution

- In case of worn out or dirt, the float valve and valve seat will not tightly close causing fuel level to increase and as a result, fuel flooding. A worn out or dirty float valve must be replaced with a new a new one.

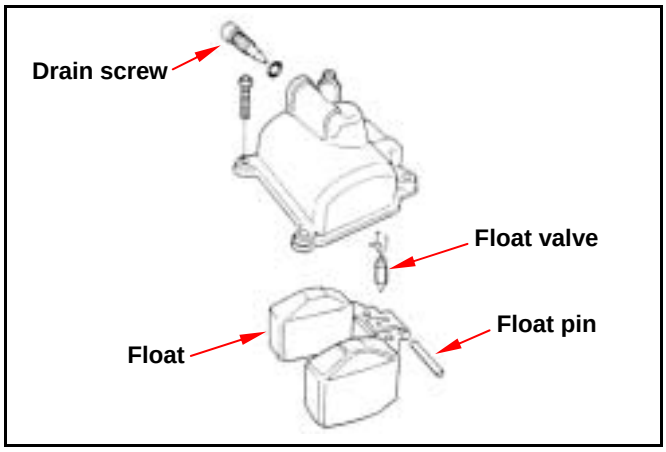

Remove main jet, fuel needle jet holder, nozzle, idle jet, air-fuel mixture adjustment screw.

Caution

- Take care not to damage jets and adjust screw.
- Before removing adjustment screw, turn it all the way down and note the number of turns.
- Do not turn adjustment screw forcefully to avoid damaging valve seat face.

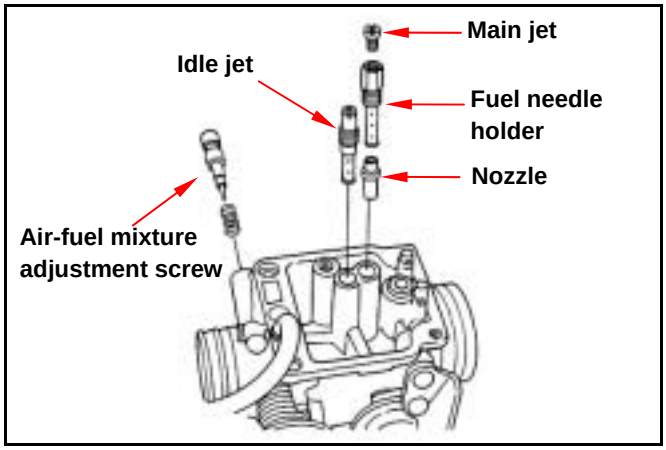

Clean jets with cleaning fluid.
Then use compressed air to blow dirt off.
Blow carburetor body passages with compressed air.

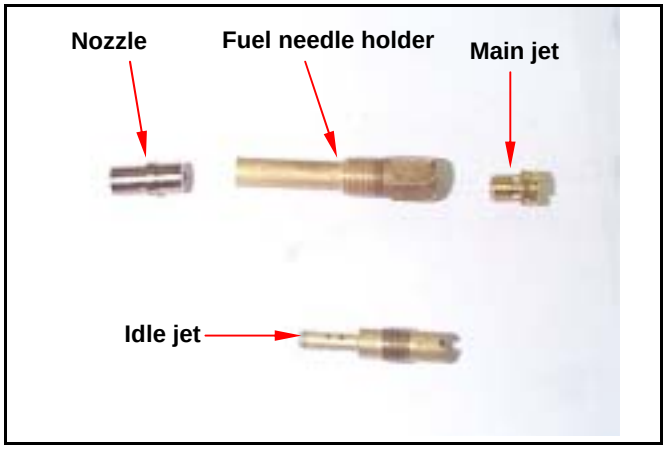

Assembly

Install main jet, fuel needle jet holder, nozzle, idle jet and air-fuel mixture adjustment screw.

Caution

- Set the adjustment screw in according to number of turns noted before it was removed.

Install the float valve, float, and float pin.

Checking Fuel Level

Caution

- Check again to ensure float valve, float for proper installation.
- To ensure correct measurement, position the float meter in such a way so that float chamber face is vertical to the main jet.

Fuel level：16.0 mm

Installation of carburetor

Install carburetor in the reverse order of removal. Following adjustments must be made after installation.

- Throttle valve cable clearance adjustment.
- Idle speed adjustment.

Idle Speed Adjustment

Caution

- Air amount adjust screw was set at factory, so no adjustment is needed. Note the number of turns it takes to screw it all the way in for ease of installation.
- Never screw in forcedly to avoid damaging the screw seat.
- The main stand must be used to support the motorcycle to perform the adjustments.

Use a tachometer when adjusting engine RPM.
Screw in adjustment screw gently, then back up to standard turns.
After warm up engine, then adjust the stopper screw of throttle valve to standard RPM.
Connect the sampling hose of exhaust analyzer to exhaust front end. Press test key on the analyzer.
Adjust the fuel amount adjustment screw and read CO reading on the analyzer
CO standard value：1.3~2.0 %
Accelerate in gradual increments, and make sure both rpm and CO value are in standard values after engine running in stable. If rpm and CO value fluctuated, repeat the procedures described above

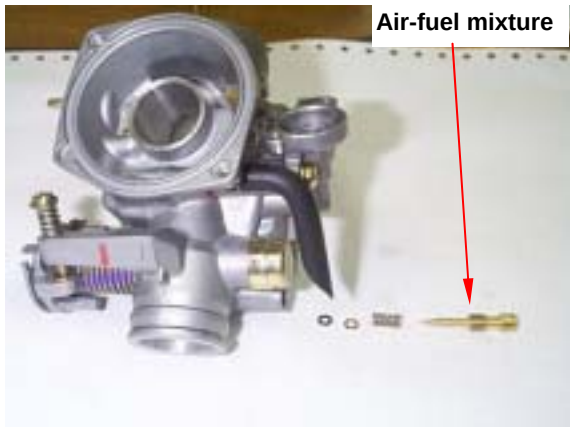

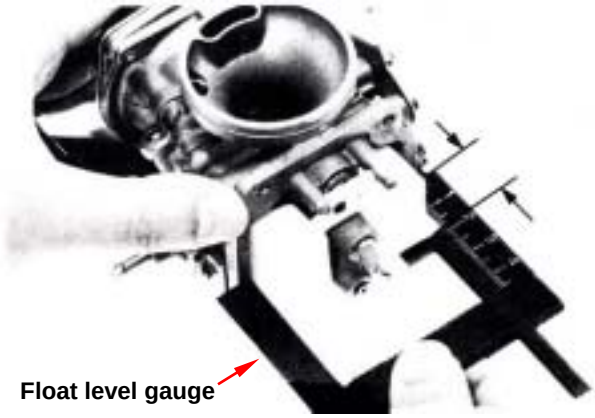

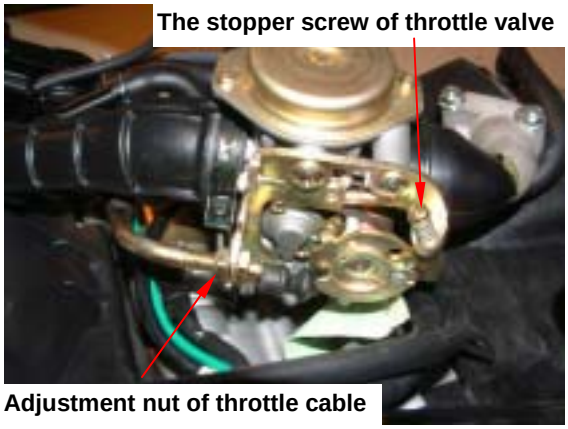

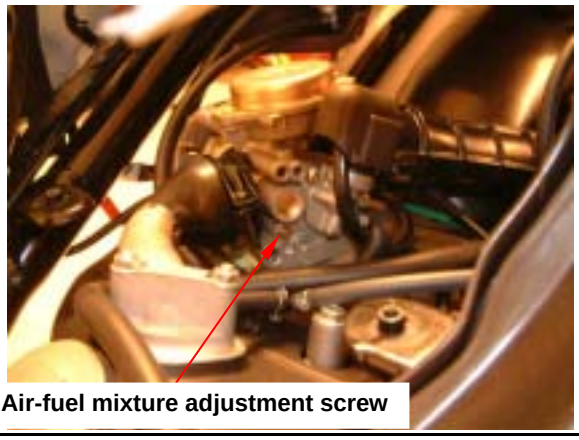

Fuel Tank

Fuel meter gauge removal

Remove the left and right side covers.
Open seat.
Remove the luggage box.
Remove rear carrier.
Remove the left and right body covers.
Remove the pedal (please refer to chapter 12 for these components above.)
Remove fuel unit coupler.

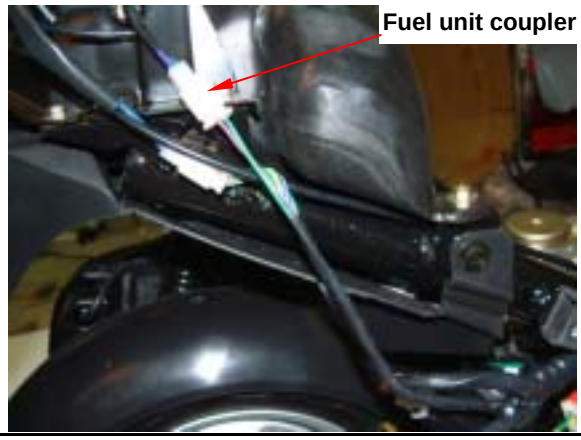

Remove the rear bracket (4 bolts & 3 screws)

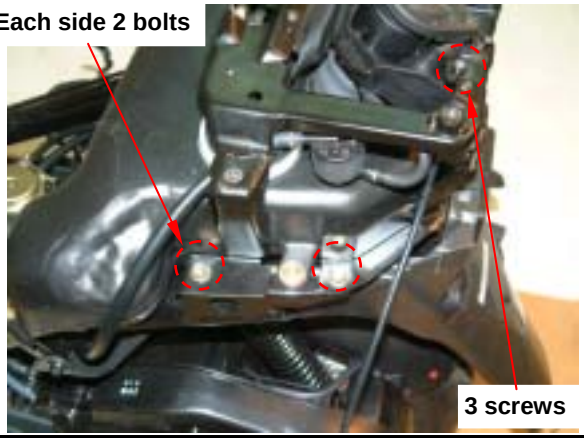

Turn fuel unit setting plate to the left, and then remove fuel unit.

Special Service Tools:

Universal fixer SYM-2210100

Check if the float and washer is damaged.
Replace it with new ones if damaged.

Caution

- Do not bend the float arm of fuel metering gauge.
- Do not fill out too much fuel to fuel tank before operation.

Fuel tank removal

Remove the left and right side covers.
Open seat.
Remove the luggage box.
Remove rear carrier.
Remove the left and right body covers.
Remove the pedal (please refer to chapter 12 for these components above.)
Remove fuel unit coupler.
Remove the rear bracket (4 bolts & 3 screws)

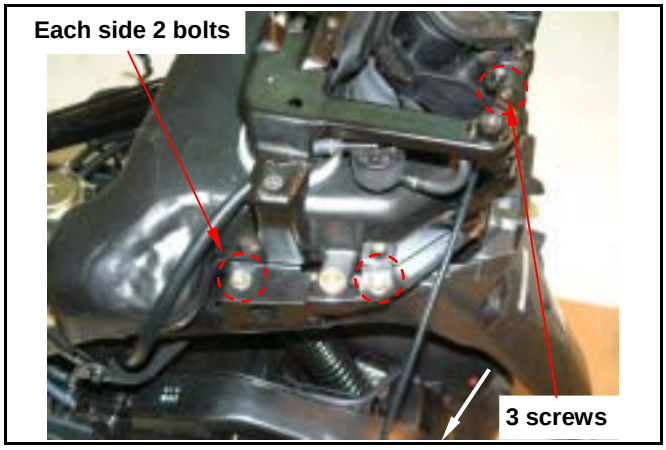

Remove the fuel tank mounting bolts (4 bolts).
Remove the all lines from the fuel tank.

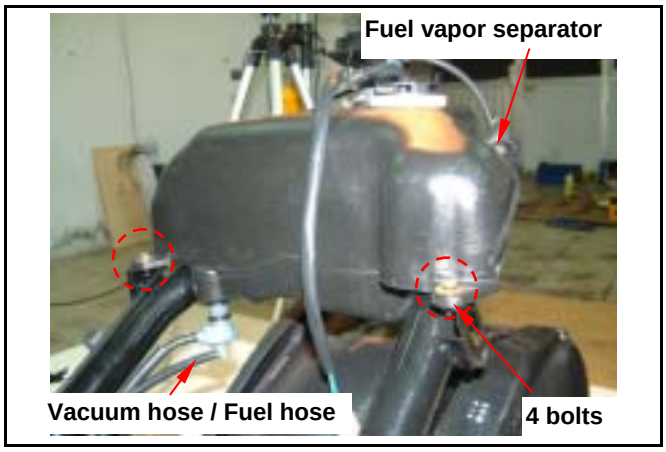

Remove fuel tank cap open cable (2 screws).

Remove the fuel tank.

Caution

- Replace the fuel tank immediately if it is broken or leakage.

Fuel Tank Installation

Install the tank in the reverse order of removal.

Air Cleaner

Removal the element of the air cleaner

Remove the air cleaner cover (7 screws).

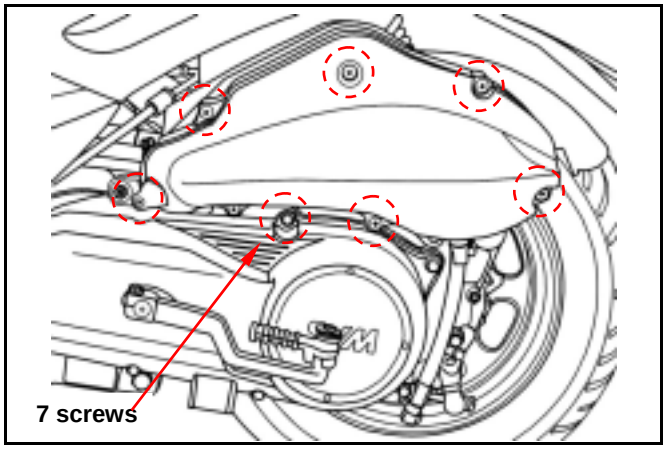

Remove air cleaner element.

Installation

Install the air cleaner in the reverse order of removal.

Removal of Air Cleaner

Open the seat.

Remove the luggage box (chapter 12).

Remove the left side cover (chapter 12).

Loose the air cleaner adapting-pipe clamp.

Remove the EEC, PCV, AI system hoses.

Remove the mounting bolts of the air cleaner body. (2 bolts)

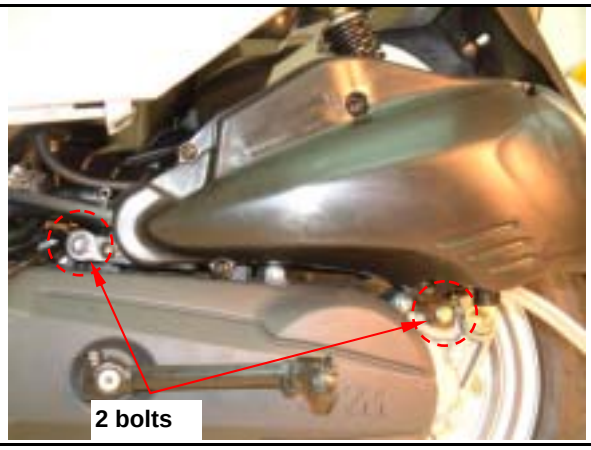

Remove the air cleaner assembly.

Installation

Install the air cleaner in the reverse order of removal.

Mechanism Illustrations ····· 5-1	Removal of Engine Bush ····· 5-6
Operational Precautions ····· 5-2	Engine Hanger ····· 5-7
Engine Removal ····· 5-3	Installation of Engine ····· 5-8

Mechanism Illustrations

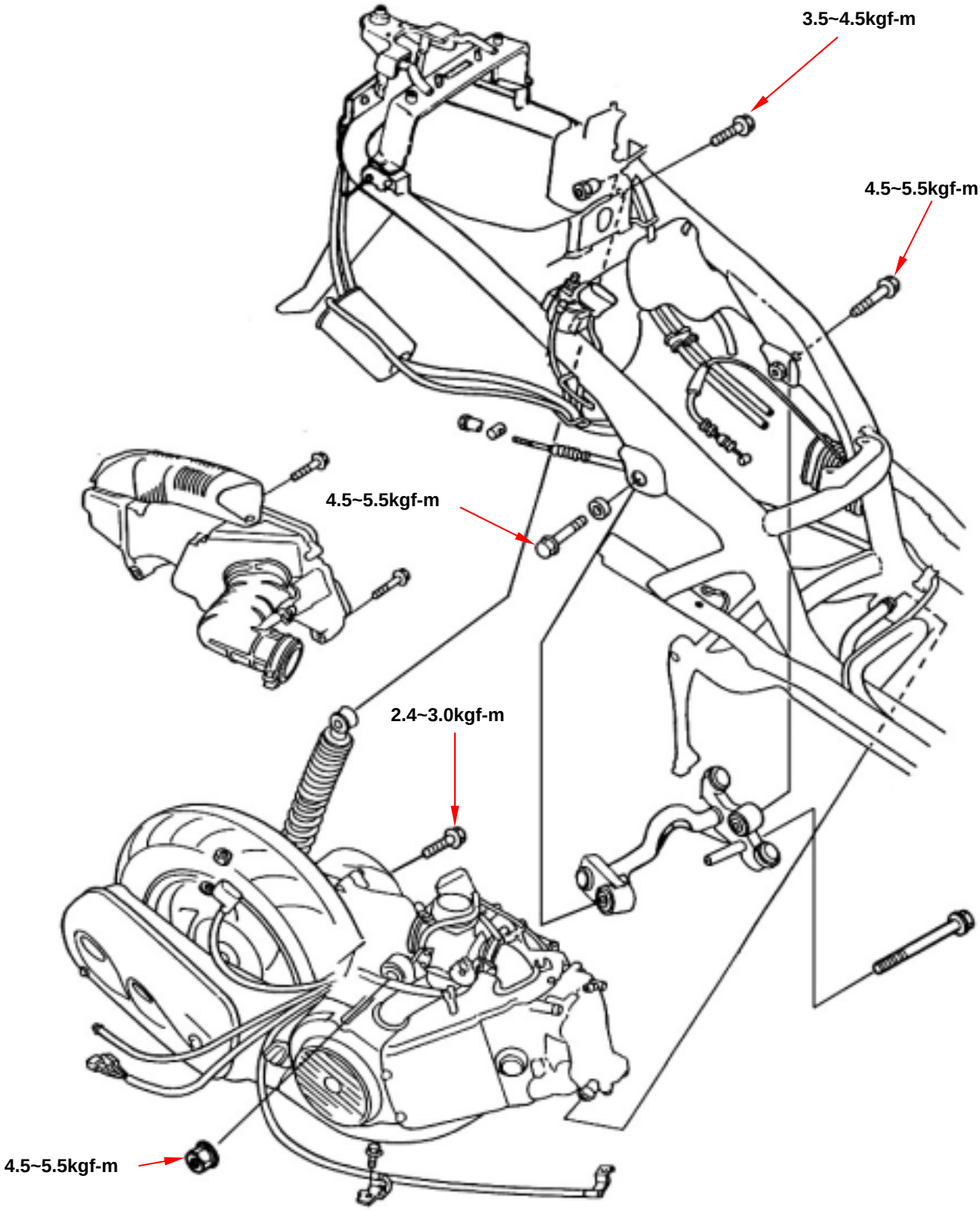

Operational Precautions

General Information

- Engine must be supported by a bracket or adjustable tool in height.
- The following parts can be serviced with the engine installed on the frame.
  1. Carburetor
  2. Driving disk, driving belt, clutch, and transporting disk
  3. Final reduction gear mechanism

Specification

Item		Specification	
		MIO 50	MIO 100
Engine Oil Capacity	Replacement	700 c.c.	650 c.c.
	Disassemble	800 c.c.	750 c.c.
Gear Oil Capacity	Replacement	90 c.c.	100 c.c.
	Disassemble	100 c.c.	110 c.c.

Torque Values

Engine hanger bolt (frame side)	4.5~5.5kgf-m
Engine hanger nut (engine side)	4.5~5.5kgf-m
Bolt of rear cushion upper connection	3.5~4.5kgf-m
Bolt of rear cushion lower connection	2.4~3.0kgf-m

Engine Removal

Open the seat.
Remove the luggage box (Bolt× 4, Nut×1).
Remove battery cover.
Remove the battery negative (-) cable.
Remove the battery positive (+) cable.

Remove right and left side covers (1 screw on each side.).

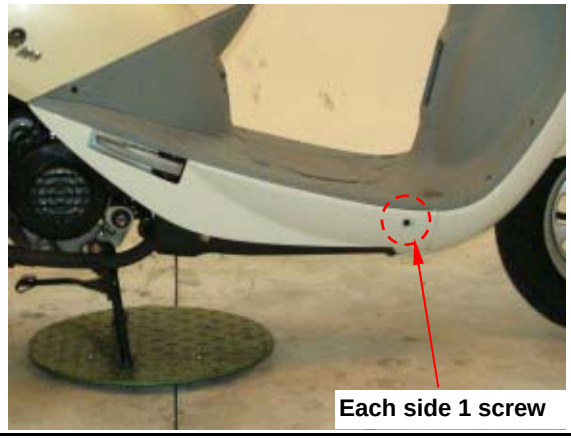

Remove the power connector of auto by-starter.
Remove the generator power wire and pulse generator connector.
Remove the starter motor wire.

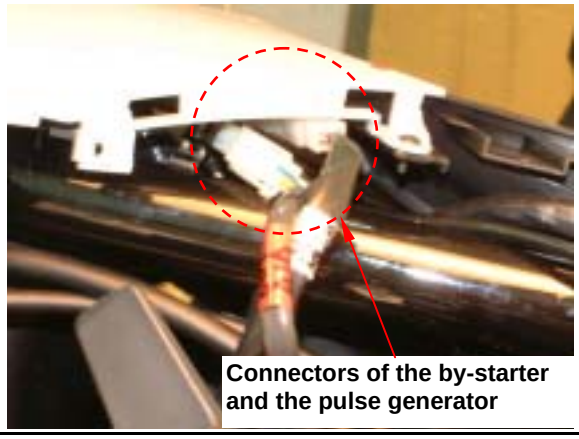

Remove the spark plug cap.

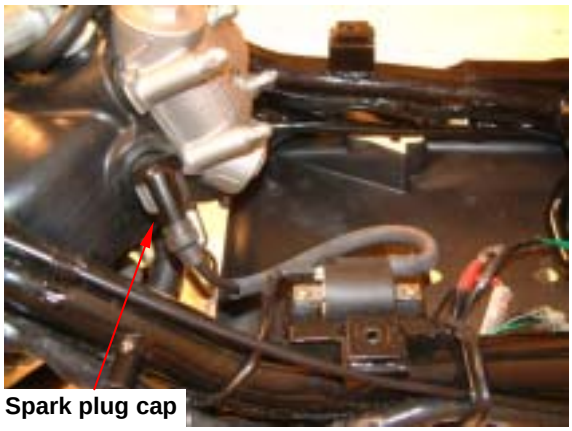

Remove the fuel line, vacuum hose, and throttle valve cable from the carburetor.
Loose the strap screw of the air cleaner guide, and then the air cleaner guide.

Remove the exhaust muffler (2 Bolts, 2 Nuts).

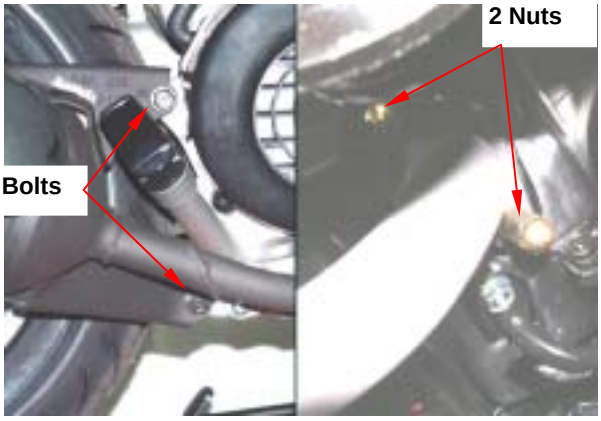

Remove the air cleaner connection bolts (2 bolts).

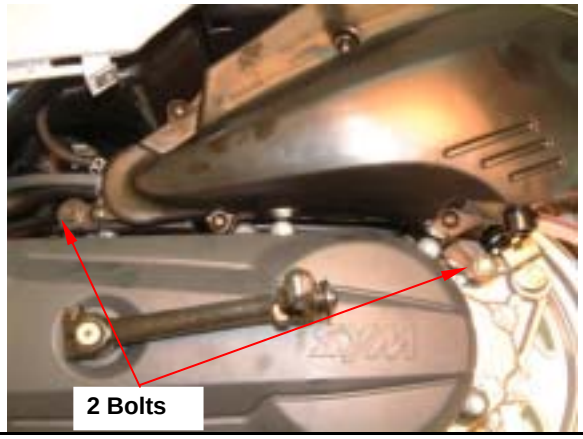

Remove the rear brake cable nut and cable.

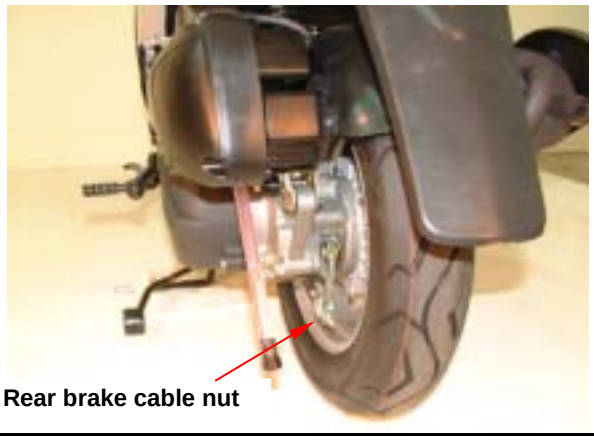

Remove the rear cushion lower bolt (1 bolt).

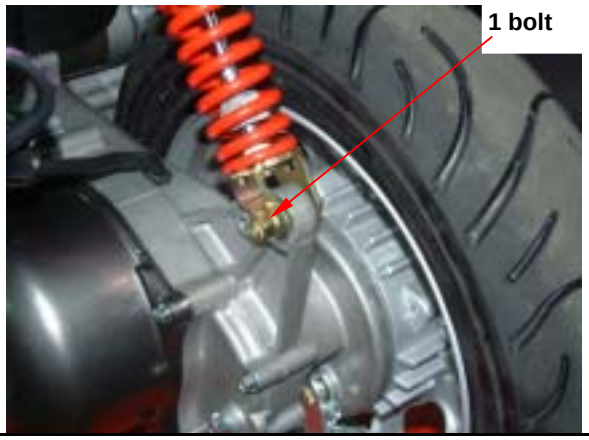

Remove the engine hanger nuts and bolts (engine side), and then remove the engine.

With a bracket to support the engine to prevent from it damage by falling down as removing the engine.
Remove the rear wheel with air tools after the engine removed.

Removal of Engine Bush

If engine hanger frame and the cushion rubber of rear cushion bush damaged. Then, with the bush remover / presser, ø28mm & ø20mm, to press the bush out, and replace it with new one.

Engine hanger bush: ø **28mm**
Rear cushion bush: ø **20mm**

Pressing out

Place the detent section of the bush remover toward the bush, and drive both the pressing ring and bolt in to press the bush out.

Special Service Tools:
Crankcase bush remover/presser SYM-1120310
Crankcase bush remover/presser SYM-1120320

Pressing In

Place the flat section of the remover toward the bush, and then drive the bush, pressing ring, and bolt in to install the bush.

Engine Hanger

Removal

Remove the right side bolt of engine hanger. (1 bolt on each side)

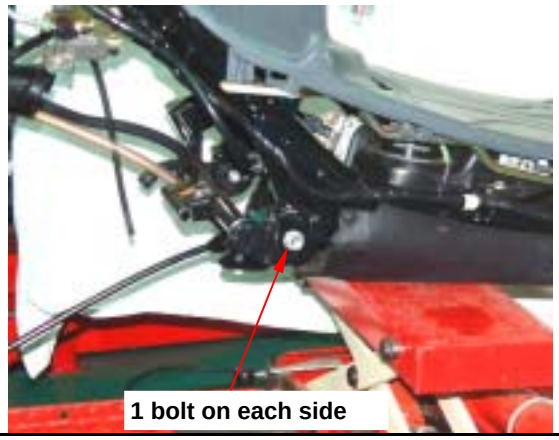

Remove the engine hanger.

Check if the engine hanger bush and cushion rubber for damage. If so, replace with new ones.

Installation

Tighten the bolts and nuts of engine hanger.

Engine hanger nut:
Torque Value: 4.5~5.5kgf-m

Installation of Engine

Install the engine according to the reversing order of removal.

Caution

- Note both feet and hands safety for squeezing as engine installation.
- Do not bent or squeeze each wires or hose.
- Route all cables and wires in accordance with the routine layout.

Engine hanger nut:
Torque Value: 4.5~5.5kgf-m

Rear cushion bolt:
Torque Value: upper：3.5~4.5kgf-m
under：2.4~3.0kgf-m

Rear wheel axle nut:
Torque Value: 11.0~13.0kgf-m

Mechanism Illustrations ····· 6-1
Operational Precautions ····· 6-2
Troubleshooting ····· 6-3
Cylinder Head Removal ····· 6-4
Cylinder Head Disassembly (HU05U) 6-6
Cylinder Head Disassembly (HU10U/W) ····· 6-7
Valve Disassembly ····· 6-9
Cylinder Head Inspection ····· 6-10
Valve Seat Inspection and Service ··· 6-12
Cylinder Head Reassembly ····· 6-14
Cylinder Head Installation ····· 6-15
Valve Clearance Adjustment ····· 6-16

Mechanism Illustrations

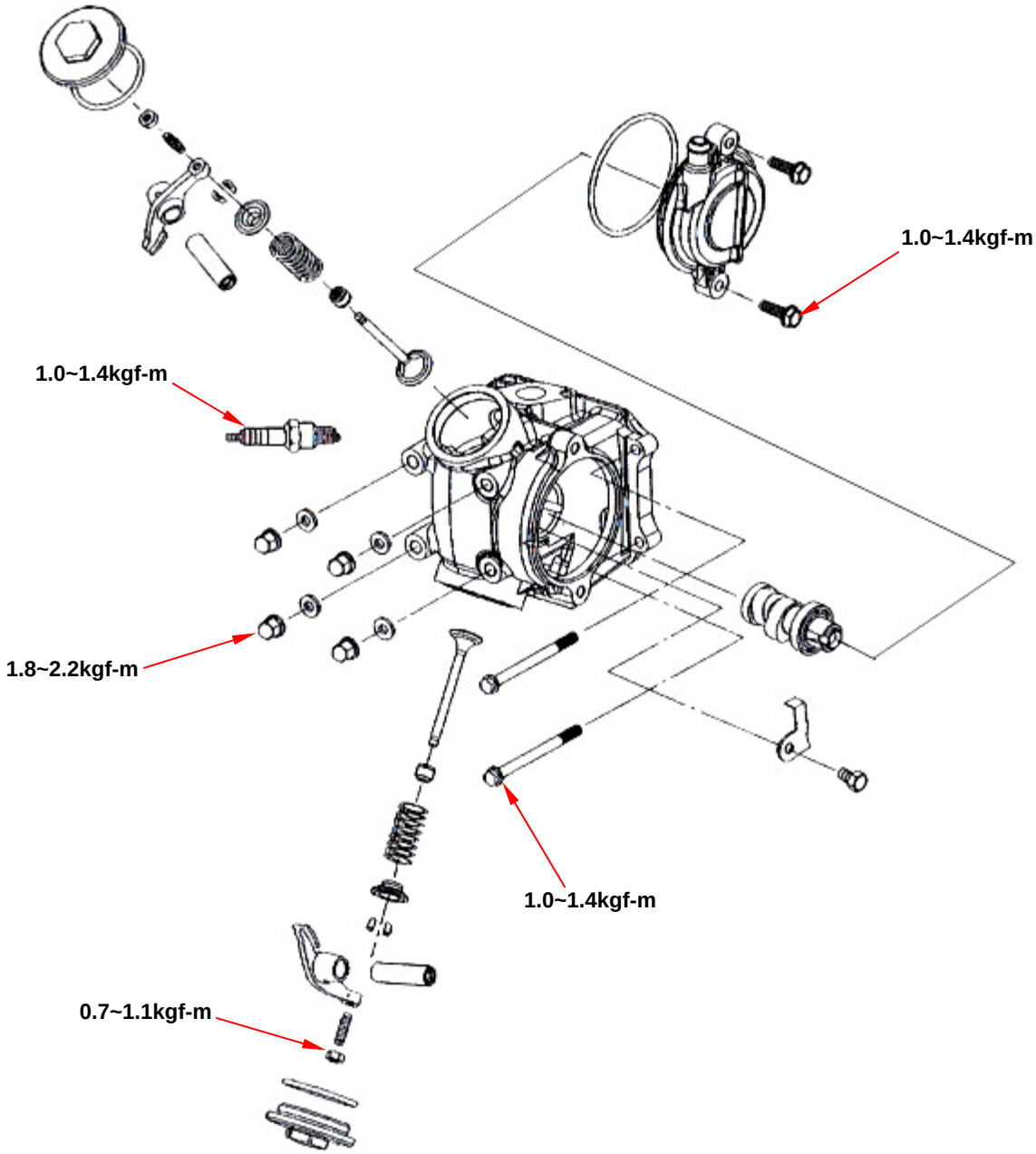

Operational Precautions

General Information

- This chapter is contained maintenance and service for cylinder head, valve, and camshaft as well as rocker arm.
- Cylinder head service cannot be carried out when engine is in frame.

Specification

Unit: mm

Model			HU10U/W		HU05U	
Item			Standard	Limit	Standard	Limit
Valve clearance (intake/exhaust valve as cold engine)			0.12 ± 0.02	—	0.05/ 0.10 ± 0.02	—
Compression pressure			12 ± 2 kg/cm²	—	9 ± 2 kg/cm²	—
Camshaft height of cam lobe		Intake	25.969	25.570	24.100	23.761
		Exhaust	25.891	25.410	23.850	23.369
Rocker arm	ID of valve rocker arm		10.000~10.015	10.100	10.000~10.015	10.100
	OD of valve rocker arm shaft		9.972~9.987	9.910	9.987~9.978	9.910
Valve	OD of valve stem	Intake	4.975~4.985	4.900	4.980~4.970	4.900
		Exhaust	4.955~4.970	4.900	4.970~4.955	4.900
	Guide seat		5.000~5.012	5.300	5.000~5.012	5.300
	Clearance between valve stem and guide	Intake	0.010~0.037	0.080	0.010~0.037	0.080
		Exhaust	0.030~0.057	0.100	0.030~0.057	0.100
	Valve seat width		1.000	1.600	1.000	1.600
Connection Flatness of cylinder head			-	0.050	-	0.050

Torque Value

Cylinder head bolt (LH)	1.0~1.4kgf-m
Cylinder head left side bolt	1.0~1.4kgf-m
Cylinder head Nut	1.8~2.2kgf-m
Sealing bolt of timing chain auto-tensioner	0.8~1.2kgf-m
Bolt of timing chain auto-tensioner	1.0~1.4kgf-m
Valve adjustment nuts	0.7~1.1kgf-m (apply with oil on bolt thread & seat)
Spark plug	1.0~1.4kgf-m

Special service tools

Valve reamer: 5.0mm
Valve guide driver: 5.0mm
Valve cover wrench SYM-ALL12361
Valve spring compressor SYM-1471100 0r
Valve spring compressor/installer SYM-1471110/20
Valve clearance adjustment wrench SYM-9001200 or
Valve clearance adjuster SYM-9001210

Troubleshooting

Engine performance will be affected by troubles on engine top end. The troubles usually can be determinate or by performing cylinder compression test and judging the abnormal noise generated.

Rough Idle

Low compression pressure

Low compression pressure

1. Valve

- Improper valve adjustment
- Burnt or bended valve
- Improper valve timing
- Valve spring damaged
- Valve carbon
- Poor sealing on valve seat
- Improper spark plug installation

2. Cylinder head

- Cylinder head gasket leaking or damage
- Tilt or crack cylinder surface

3. Piston

- Piston ring worn out

High compression pressure

- Too much carbon deposit on combustion chamber or piston head

Noise

- Improper valve clearance adjustment
- Burnt valve or damaged valve spring
- Camshaft wear out or damage
- Cam chain wear out or looseness
- Auto-tensioner wear out or damage of cam chain
- Camshaft sprocket wear out
- Rocker arm or rocker arm shaft wear out

White smoke

- Valve guide or valve stem wear out
- Valve stem seal wear out

Cylinder Head Removal

Remove the right cooling shroud from the engine outer cover. (5 screws)

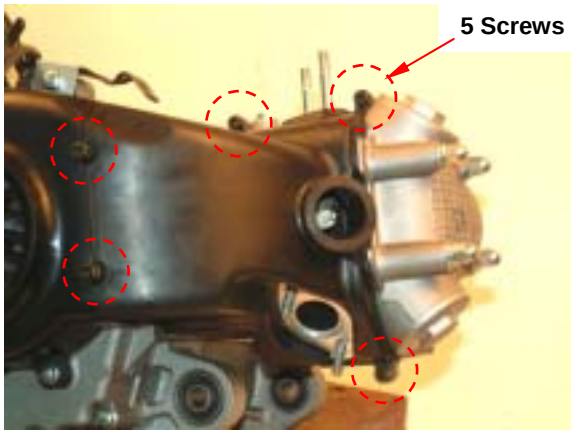

Remove the left cooling shroud (1 bolt).
Remove the crankcase blow-by system hose from the cylinder head.

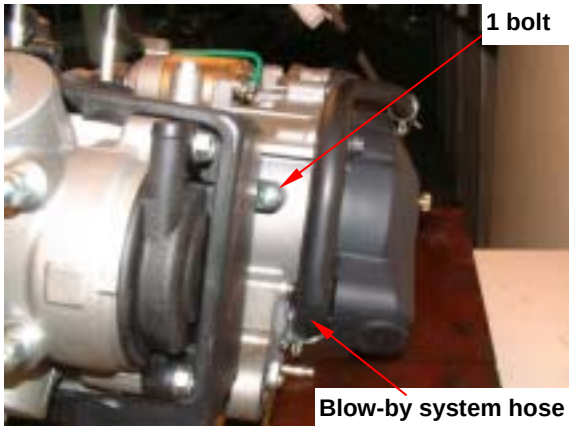

Remove the cam chain tensioner (2 bolts).

Remove the cylinder head side cover. (2 bolts)

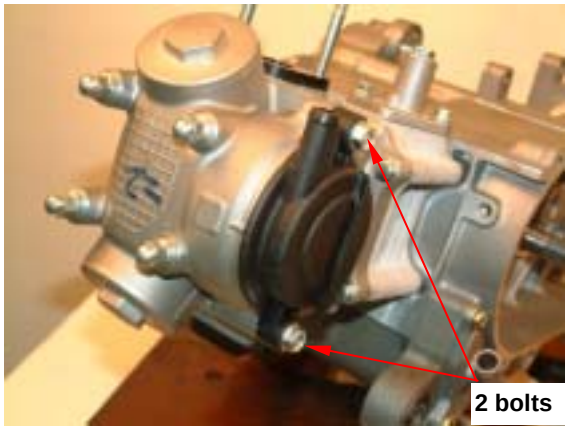

Turn the flywheel in counter clockwise motion with T type wrench until the “Timing” mark on camshaft aligned with the mark on the cylinder head.
Remove camshaft sprocket mounting bolt and remove the sprocket.
Remove the left side cylinder head and cylinder connection bolts (2 bolts)

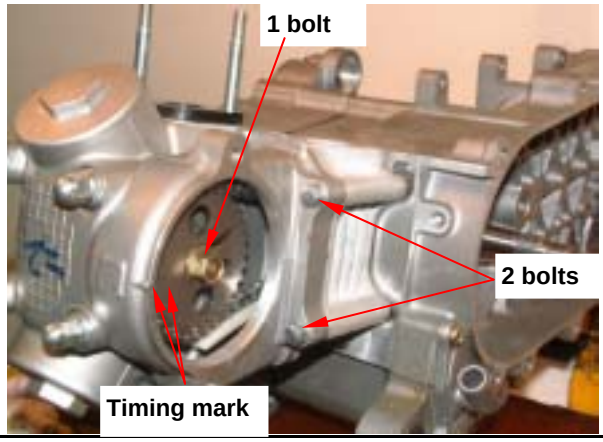

Remove the cylinder head mounting nuts (4 nuts).

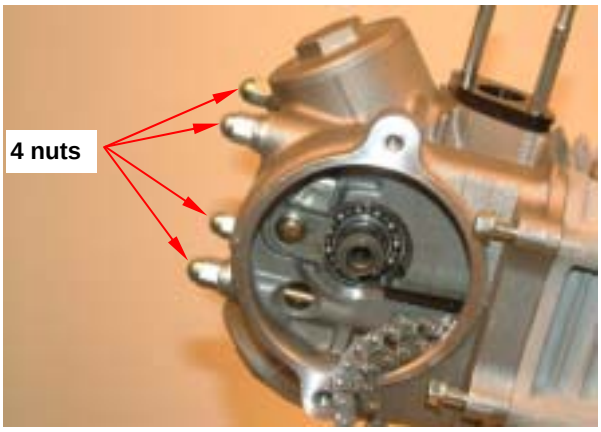

Remove the cylinder head.
Clean up residues from the matching surfaces of cylinder and cylinder head.

Caution

- Do not damage the matching surfaces of cylinder and cylinder head.
- Avoid residues of gasket or foreign materials falling into crankcase as cleaning.

Cylinder Head Disassembly (HU05U)

Remove the valve cover from the cylinder head.
Special Service Tool:
Cylinder head wrench: SYM-ALL12361

Remove the camshaft stopper of the rocker arm shaft (1 bolt).

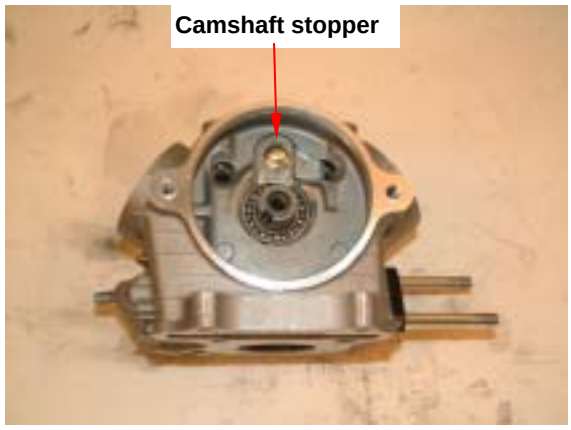

With valve rocker arm puller to drive into the rocker arm shaft, and then remove the rocker arm shaft and the rocker arm.
Special Service Tool:
Valve rocker arm shaft puller:
SYM-1445100-A1A

Take out the rocker arm and shaft.

Cylinder Head Disassembly (HU10U/W)

Remove the valve cover from the cylinder head.
Special Service Tool:
Cylinder head wrench: SYM-ALL12361

Remove the camshaft stopper of the rocker arm shaft (1 bolt).

With valve rocker arm puller to drive into the rocker arm shaft, and then remove the rocker arm shaft and the rocker arm.
Special Service Tool:
Valve rocker arm shaft puller:
SYM-1445100-A1A

Take out the rocker arm and shaft.

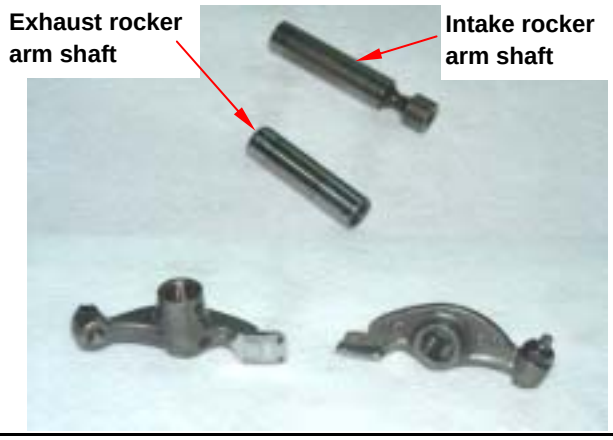

Remove the camshaft.

Camshaft Inspection
Inspect cam lobe height for damaged.
Service Limit:
(Refer to page 2)
Inspect the camshaft bearing for looseness or wear out. If any damaged, replace whole set of camshaft and bearing.

Measure the cam rocker arm I.D.
Service Limit:
(Refer to page 2)

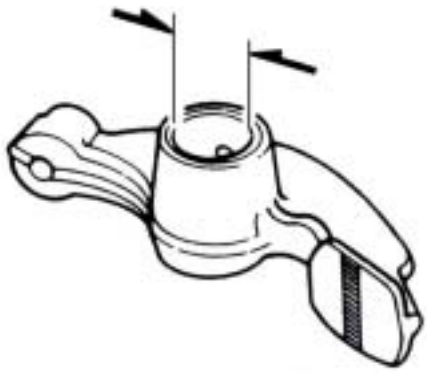

Measure the active O.D. of the cam rocker arm shaft and cam rocker arm.
Service Limit:
(Refer to page 2)

Calculate the clearance between the rocker arm shaft and the rocker arm.
Service Limit:
(Refer to page 2)

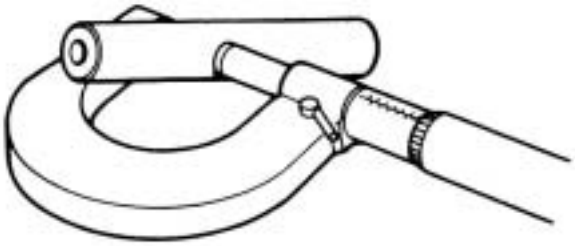

Valve Disassembly

Remove the valves

Special Service Tool:

Valve remover/installer SYM-1471110/20

Caution

- Place a rag under the bottom of the combustion chamber as disassembling to prevent from valve stem deformation.

Remove the valve spring retainer, valve springs and valves.

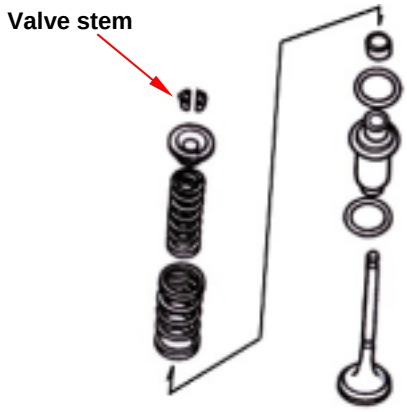

Clean carbon deposits in combustion chamber. Clean residues and foreign materials on cylinder head matching surface.

Caution

- Do not damage the matching surface of cylinder head.

Cylinder Head Inspection

Cylinder Head

Check if spark plug and valve holes are crack.
Measure cylinder head wrap age with a straightedge and flat feeler gauge.
Service limit: 0.05mm

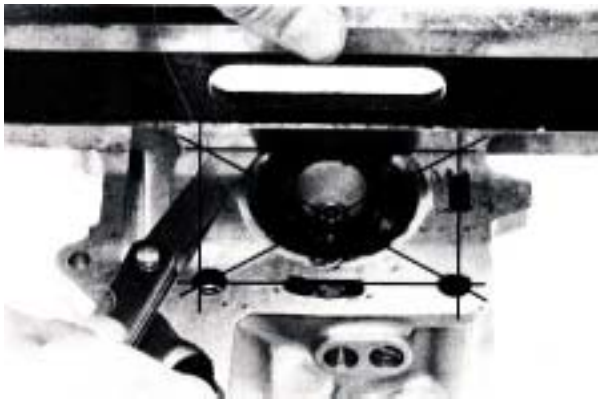

Valve spring free length

Measure the free length of intake and exhaust valve springs.
Service limit: 31.5mm

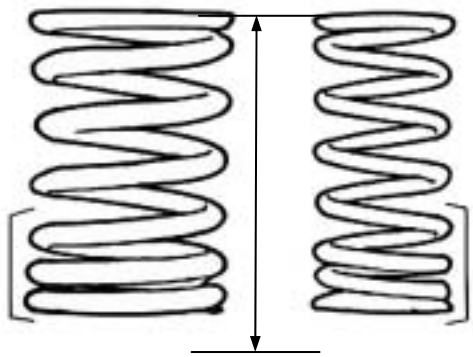

The narrow pitch of the spring shall face to the combustion chamber.

Valve stem

Check if valve stems are bend, crack or burn.
Check the operation condition of valve stem in valve guide, and measure & record the valve stem outer diameter.
Service Limit: (Refer to page 2)

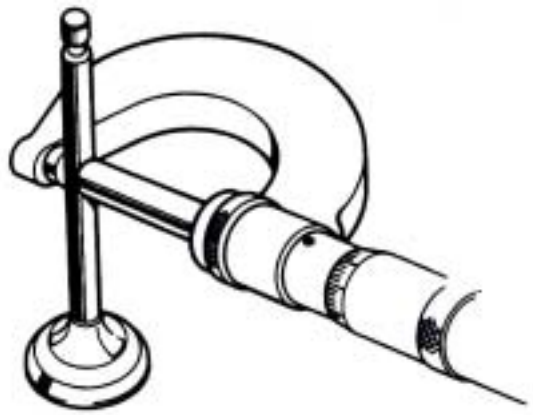

Valve guide

Caution

- Before measuring the valve guide, clean carbon deposits with reamer.

Special Service Tool:
5.0mm valve guide reamer
Measure and record each valve guide inner diameters.
Service limit: 5.03mm
The difference that the inner diameter of valve guide deducts the outer diameter of valve stem is the clearance between the valve stem and valve guide.
Service Limit: (Refer to page 2)

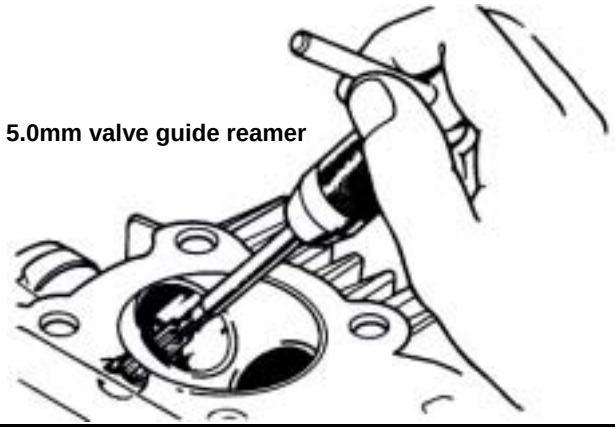

Caution

- If clearance between valve stem and valve guide exceeded service limit, check whether the new clearance that only replaces new valve guide is within service limit or not. If so, replace valve guide.

Correct it with reamer after replacement.
If clearance still exceeds service limit after replaced valve guide, replace valve stem too.

Caution

- It has to correct valve seat when replacing valve guide.

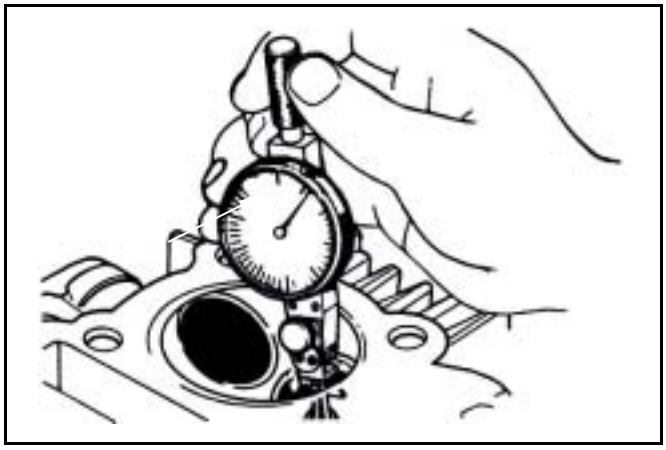

Valve stem replacement

Heat up cylinder head to 100~150 ℃ with heated plate or toaster.

Caution

- Do not let torch heat cylinder head directly. Otherwise, the cylinder head may be deformed as heating it.
- Wear on a pair of glove to protect your hands when operating.

Hold the cylinder head, and then press out old valve guide from combustion chamber side.
Special Service Tool:
Valve guide driver: 5.0mm

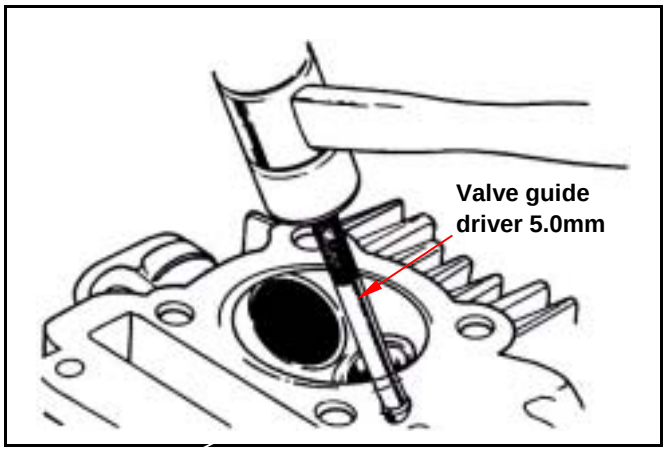

Caution

- Check if new valve guide is deformation after pressed it in.
- When pressing in the new valve guide, cylinder head still have to be kept in 100~150 ℃.

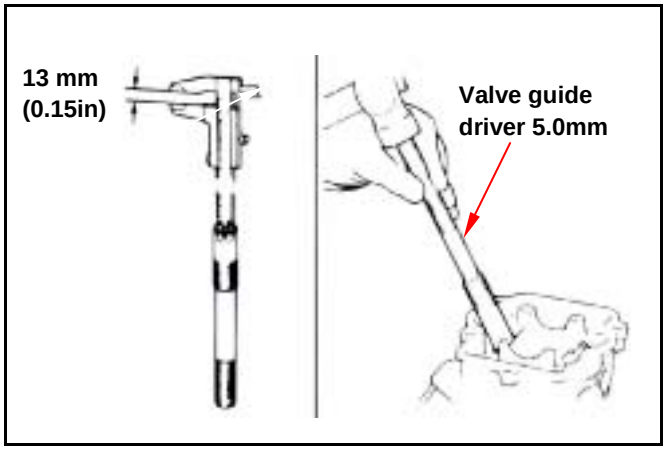

Adjust the valve guide driver and let valve guide height is in 13mm.
Press in new valve guide from rocker arm side.
Special Service Tool:
Valve guide driver: 5.0mm
Wait for the cylinder head cooling down to room temperature, and then correct the new valve guide with reamer.

Caution

- Using cutting oil when correcting valve guide with a reamer.
- Turn the reamer in same direction when it be inserted or rotated.

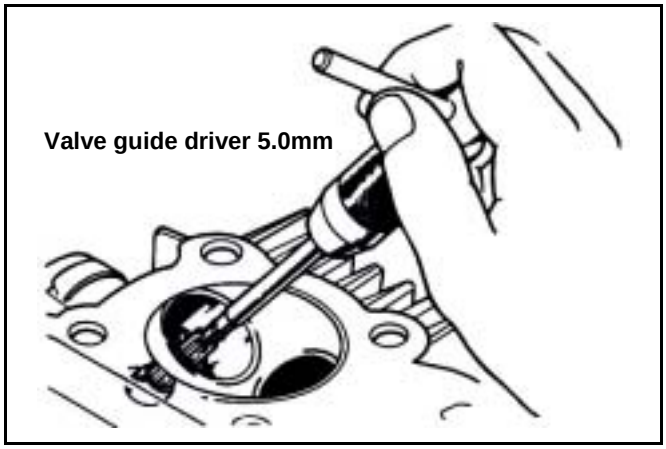

Correct valve seat, and clean up all metal residues from cylinder head.
Special Service Tool: Valve reamer: 5.0mm

Valve Seat Inspection and Service

Clean up all carbon deposits onto intake and exhaust valves.
Apply with emery slightly onto valve contact face.
Grind valve seat with a rubber hose or other manual grinding tool.

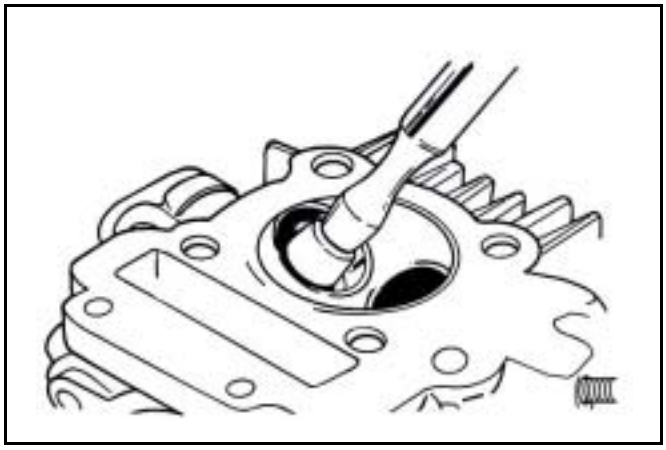

Caution

- Do not let emery enter into between valve stem and valve guide.
- Clean up the emery after corrected, and apply with red paint onto contact faces of valve and valve seat.

Remove the valve and check its contact face.

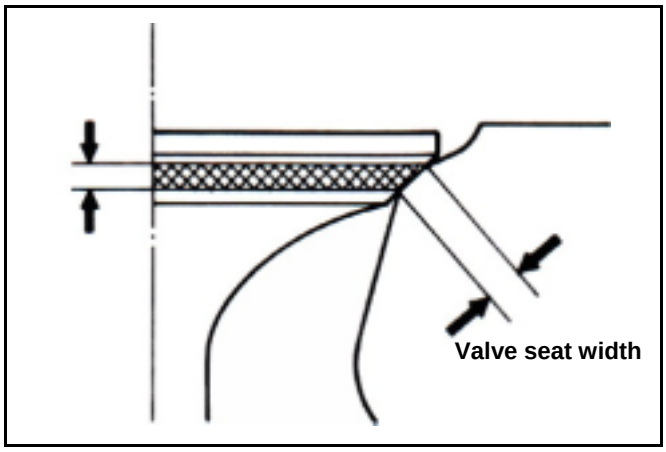

Caution

- Replace the valve with new one if valve seal is roughness, wear out, or incomplete contacted with valve seat.
- If the valve and the valve seat still can not be matched sealing after grinded, replace it with new one.

Valve seat inspection

If the valve seat is too width, narrow or rough, corrects it.

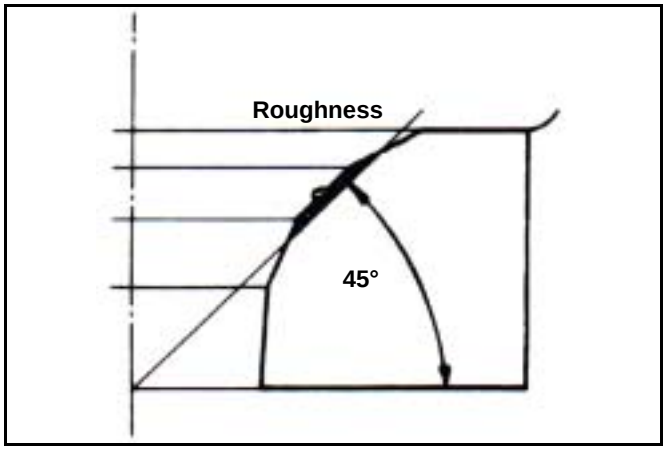

Valve seat width

Service limit: 1.6mm

Check the contact condition of valve seat.

Valve seat grinding

The worn valve seat has to be grinded with valve seat chamfer cutter.
Refer to operation manual of the valve seat chamfer cutter.
Use 45° valve seat chamfer cutter to cut any rough or uneven surface from valve seat.

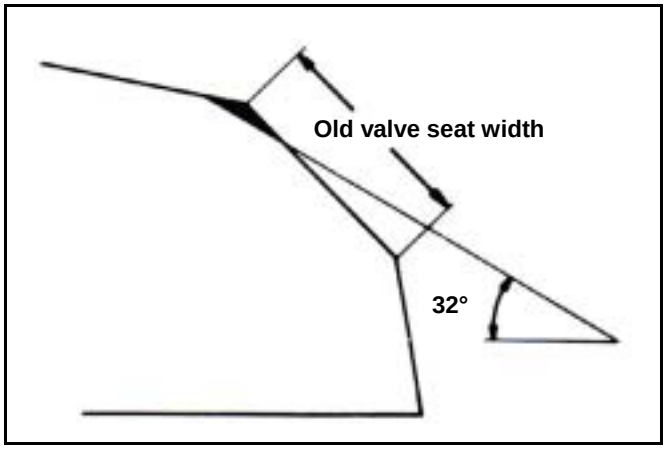

Caution

- After valve guide had been replaced, it has to be grinded with 45° valve seal chamfer cutter to correct its seat face.

Use 32° cutter to cut a quarter upper parts out.

Use 60° cutter to cut a quarter lower parts out.
Remove the cutter and check new valve seat.

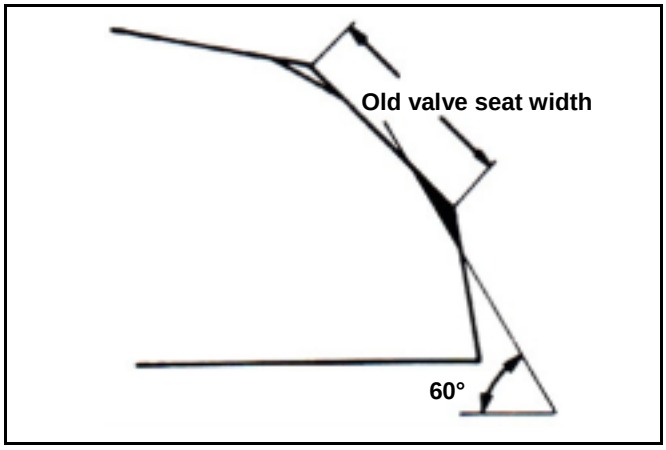

Use 45° cutter to grind the valve seat to specified width.

Caution

- Make sure that all roughness and uneven faces had been grinded.

Grind valve seat again if necessary.

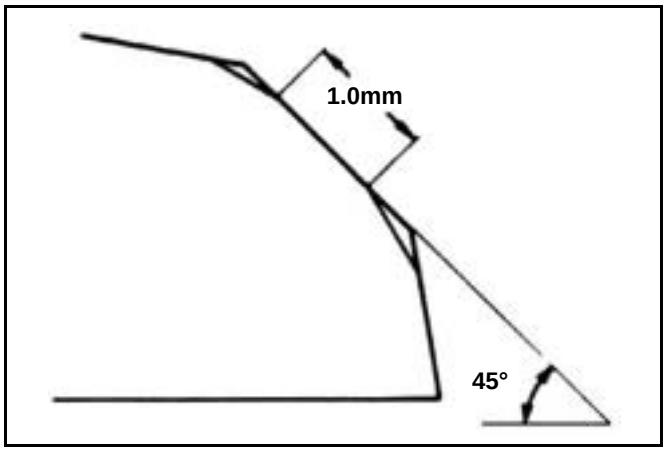

Coat the valve seat surface with red paint.
Install the valve through valve guide until the valve contacting with valve seat, slightly press down the valve but do not rotate it so that a seal track will be created on contact surface.

Caution

- The contact surfaces of valve and valve seat are very important to the valve sealing capacity.

If the contact surface is too high, grind the valve seat with 32° cutter.
Then, grind the valve seat to specified width with 45° cutter.

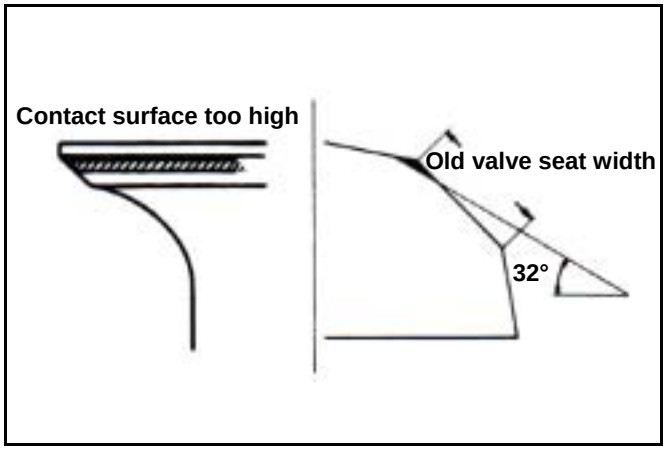

If the contact surface is too low, grind the valve seat with 60° cutter.
Then, grind the valve seat to specified width with 45° cutter.

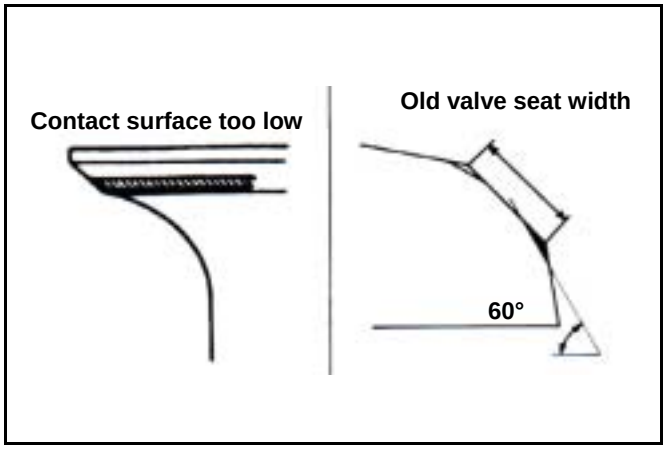

After the valve seat grinded, coat valve seat surface with emery and then slightly press the grinded surface.
Clean up all emery coated onto cylinder and valve after grinded.

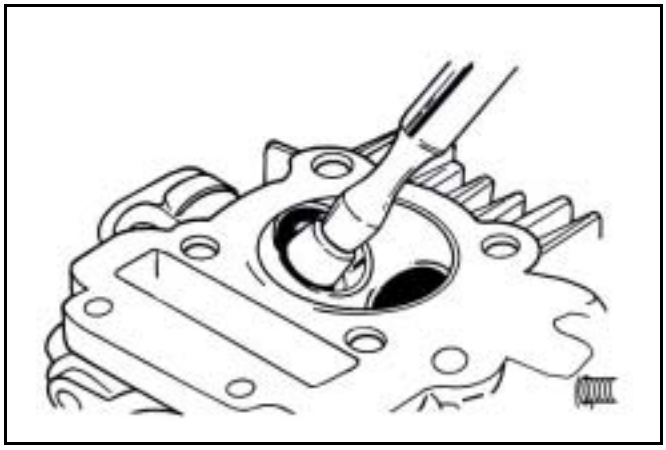

Cylinder Head Reassembly

Lubricate valve stem with engine oil, and then insert the valve into valve guide.
Install new valve stem oil seal.
Install valve springs and retainers.

Caution

- The closed coils of valve spring should face down to combustion chamber.

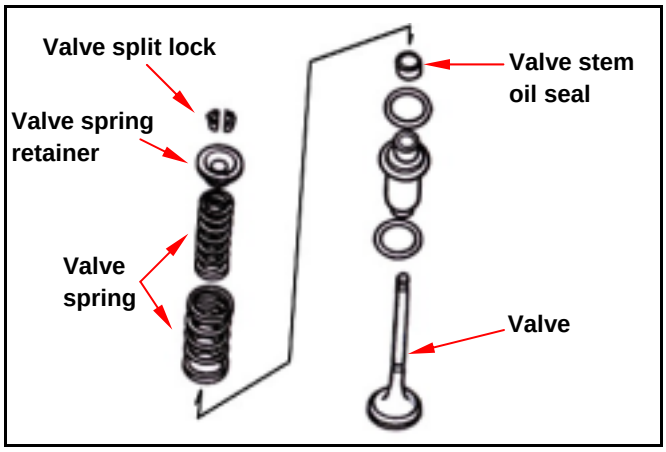

Install the valves with the valve remover/installer.
Special Service Tool:
Valve remover / installer SYM-1471110/20.

Caution

- Place a rag under the bottom of the combustion chamber as disassembling to prevent from valve stem deformation.

Tap valve stem with a plastic hammer to make valve retainer and valve stem sealing properly.

Caution

- Place and hold cylinder head on to working table so that can prevent from valve damaged.

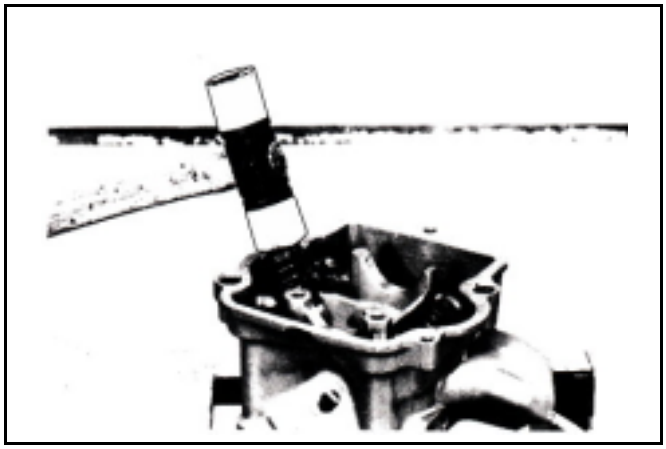

Assembly the cylinder head.

Caution

- The tangent of rocker shaft of intake valve should match with the bolt hole of camshaft mounting seat.

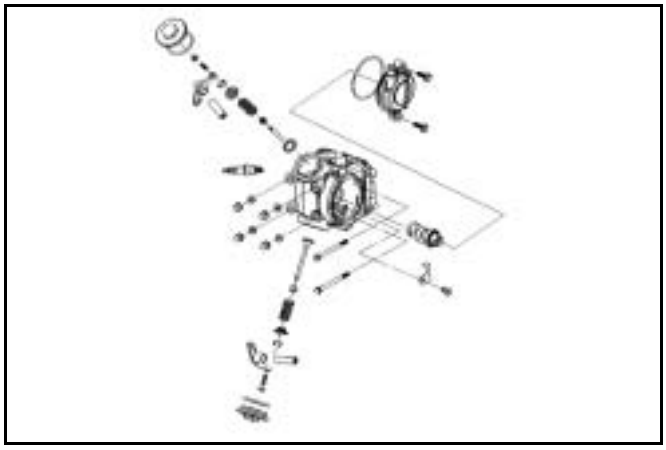

Cylinder Head Installation

Install the lock pins and new cylinder head gasket onto the cylinder.
Install the camshaft chain plate.

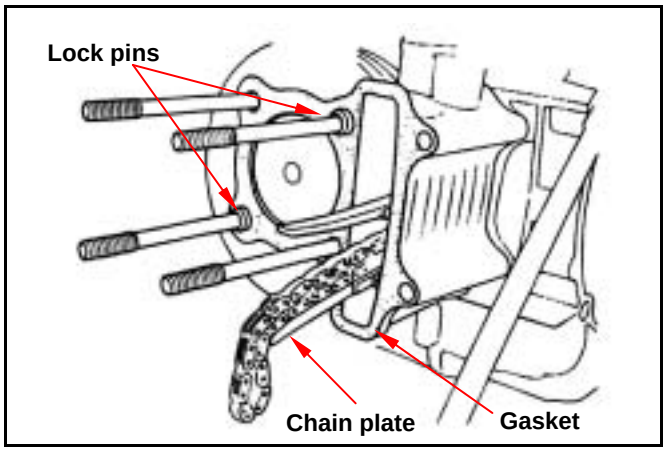

Tighten the cylinder head nuts (4 nuts)
At first, tighten the 4 nut on the cylinder top and then tighten the 2 bolts on the left side of cylinder head.

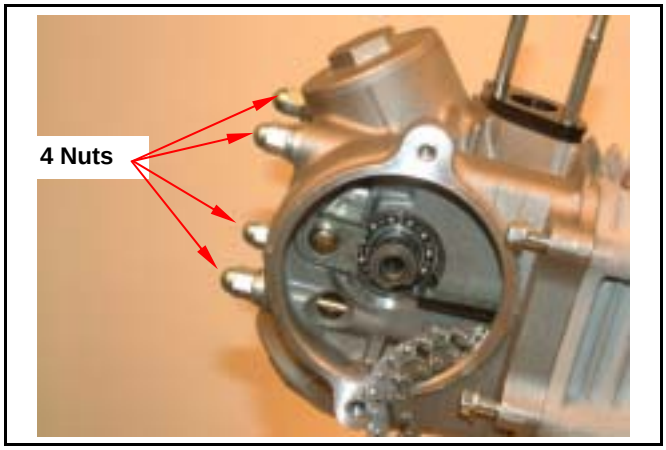

With T type wrench to turn crankshaft in a clockwise motion so that the “T” mark on the generator flywheel aligns with the mark on crankcase. (piston is at TDC position)

Place the TDC marks of the cam sprocket at same level of the top-end of cylinder head. The other single hole of the cam sprocket is in upward.
Then, install the cam chain onto the cam sprocket. (bolts x2)
Torque value: 1.8~2.2kgf-m
Install the spark plug and tighten it.
Torque value: 1.0~1.4kgf-m

Caution

- Apply with oil onto the thread of cylinder head bolts and tighten the bolts in diagonally for 2-3 sequences.
- Do not over tightening the bolts to avoid the cylinder head deformation, noise created or leaking so that effects motorcycle’s performance.

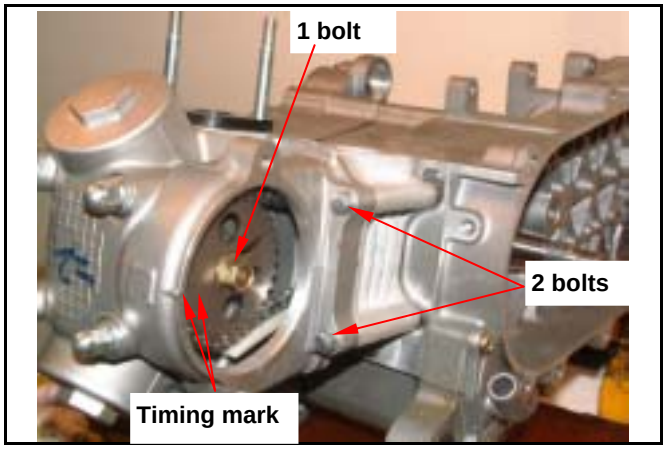

Valve Clearance Adjustment

Install the auto-chain tensioner.

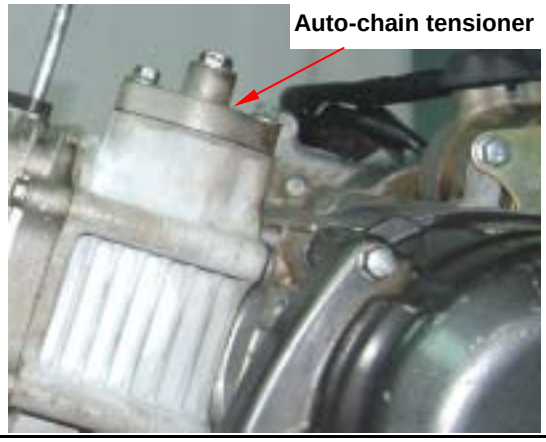

Loosen valve clearance adjustment nuts and bolts located on valve rocker arm.
Measure and adjust valve clearance with feeler gauge.
After valve clearance had been adjusted to standard value, hold adjustment bolt and then tighten the Adjustment nut.
Standard Value: (Refer to page 2)
Special Service Tool:
Valve clearance adjustment wrench SYM-9001200 or valve clearance adjuster SYM-9001210.

Install the side cover of the cylinder head. (2 bolts)

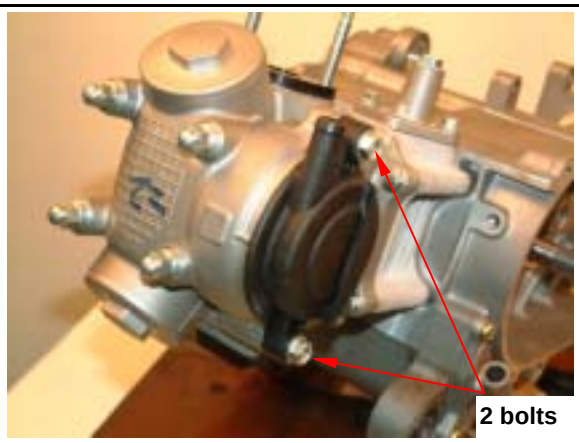

Install the left cooling shroud of the engine body outer cover. (1 bolt)

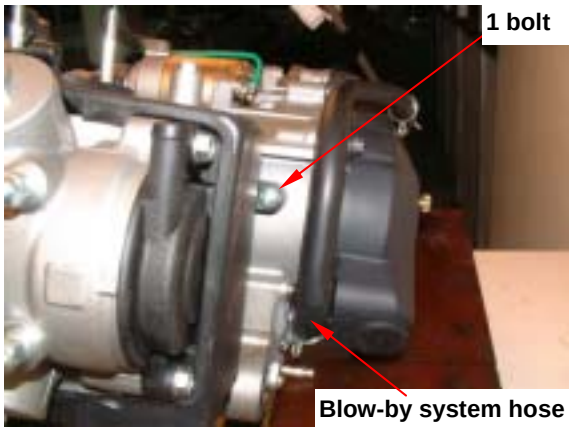

Install the cooling shroud of the engine body outer cover. (5 bolts)

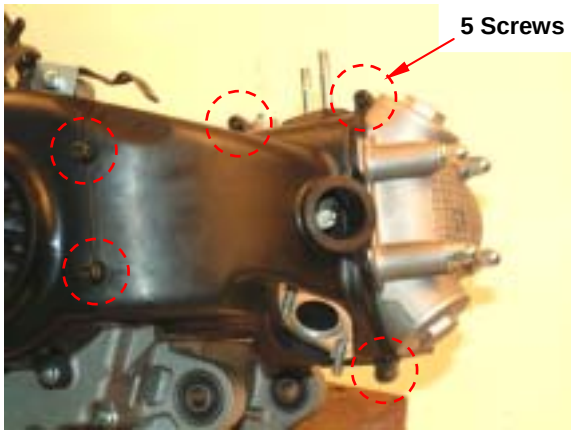

Install the engine onto the frame.
(Refer to chapter 5)

Notes:

Mechanism Illustrations ····· 7-1	Piston Removal ····· 7-5
Operational Precautions ····· 7-2	Piston Ring Installation ····· 7-7
Trouble Diagnosis ····· 7-2	Piston Installation ····· 7-8
Cylinder Removal ····· 7-3	Cylinder Installation ····· 7-8

Mechanism Illustrations

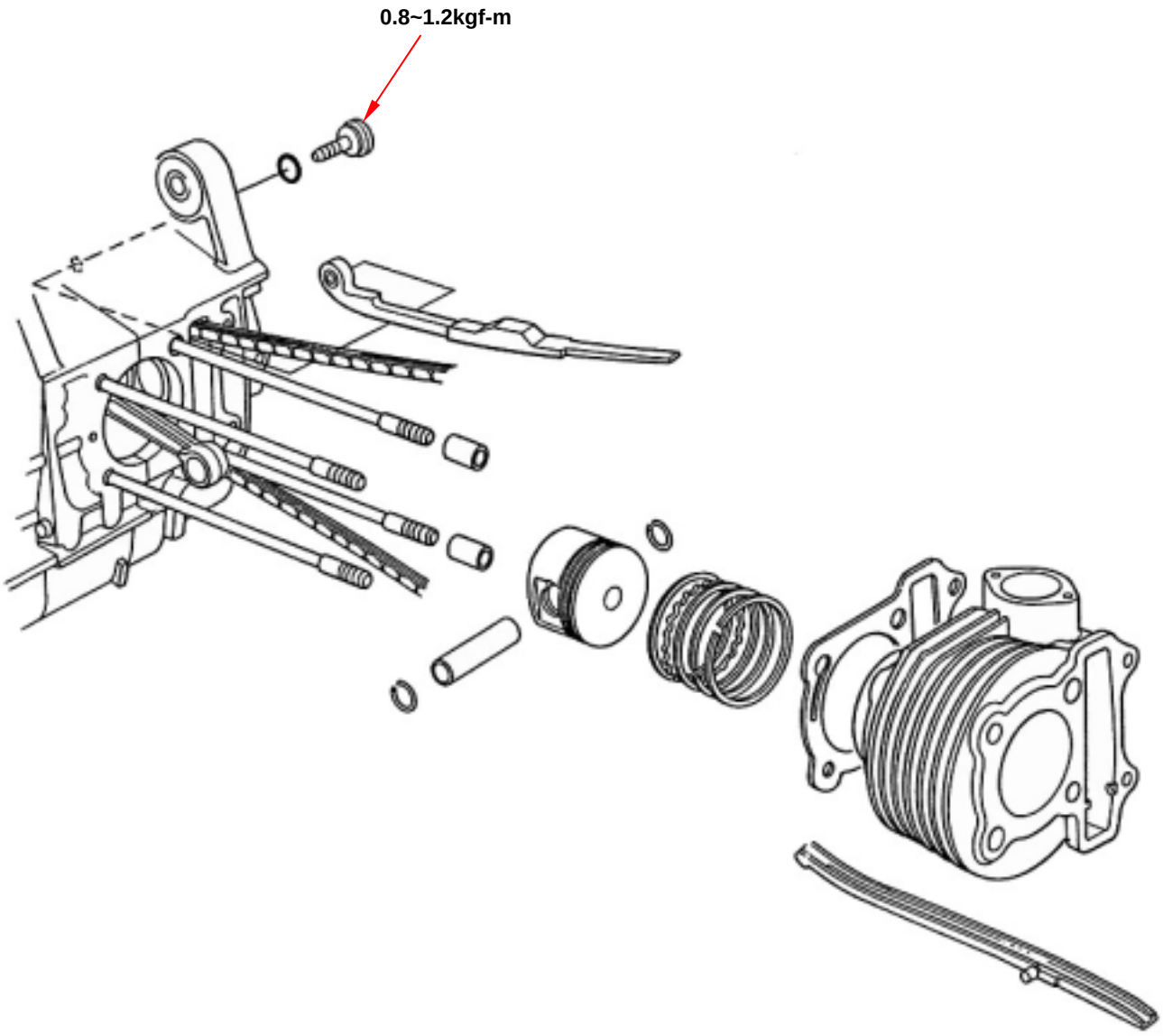

Operational Precautions

General Information

- Both cylinder and piston service cannot be carried out when engine mounted on frame.

Specification

Unit: mm

Model			HU10U/W		HU05U	
Item			Standard	Limit	Standard	Limit
Cylinder	ID		49.995~50.015	50.500	37.015~36.995	37.500
	Bend / wrap age		—	0.050	—	0.050
	Cylindrical roundness		—	0.050	—	0.050
	Cylindrical roundness		—	0.050	—	0.050
Piston/ Piston ring	Clearance between piston rings	top ring	0.015~0.050	0.090	0.015~0.050	0.090
		2nd ring	0.015~0.050	0.090	0.015~0.050	0.090
	Ring-end gap	top ring	0.100~0.250	0.500	0.100~0.250	0.500
		2nd ring	0.100~0.250	0.500	0.100~0.250	0.500
		oil ring	0.300~0.900	—	0.2~0.7	—
	OD of piston		49.970~49.990	49.900	36.985~37.005	36.900
	Piston OD measurement position		Lower-end up 9mm of piston skirt	—	Lower-end up 9mm of piston skirt	—
	Clearance between piston and cylinder		0.005~0.015	0.100	0.005~0.015	0.100
	ID of piston pin boss		13.002~13.008	13.040	10.002~10.008	10.040
OD of piston pin			12.994~13.000	12.960	10.000~10.006	9.966
Clearance between piston and piston pin			0.002~0.014	0.020	0.002~0.014	0.020
ID of connecting rod small-end			13.016~13.034	13.060	10.016~10.034	10.060

Trouble Diagnosis

Low or Unstable Compression Pressure
Cylinder or piston ring worn out

High compression Pressure
Carbon deposit onto piston and combustion chamber

Knock or Noise
Cylinder or piston ring worn out
Carbon deposits on cylinder head top-side
Piston pin hole and piston pin wear out

Smoking in Exhaust Pipe
Piston or piston ring worn out
Piston ring installation improperly
Cylinder or piston damage

Engine Overheat
Carbon deposits on cylinder head top side

Cylinder Removal

Remove cylinder head. (Refer to chapter 6)
Remove cam chain plate.

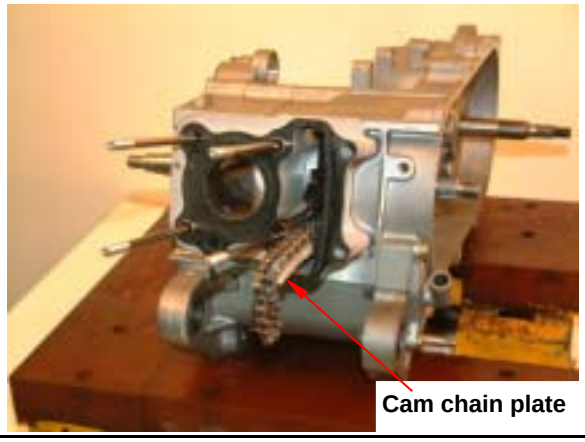

Remove cylinder.

Remove cylinder gasket and lock pins.

Cover the holes of crankcase and cam chain with a piece of cloth.
Clean up all residues or foreign materials from the two matching surfaces of cylinder and crankcase.

Caution

- To soap the residues into solvent so that the residues can be removed more easily.

Inspection

Check if the inner diameter of cylinder is worn out or damaged.
In the 3 positions (top, center and bottom) of cylinder, measure the X and Y direction values respective in the cylinder.
Service limit: (Refer to page 2)
Calculate both the real roundness (the difference between X and Y motion values) and the cylindrical roundness (the difference in the top, center or bottom positions of X or Y motion values.)
Then, determinate by the max. value
Service limit:
Real roundness: correct or replace as over 0.05mm
Cylindrical roundness: correct or replace as over 0.05mm

Check Cylinder Wrap age.
Service limit: 0.05mm

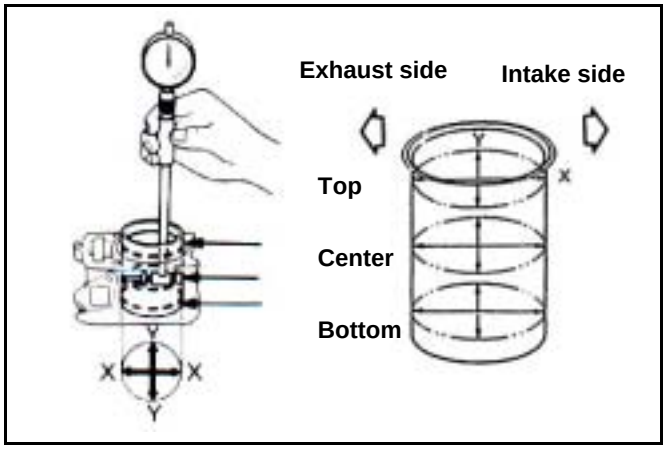

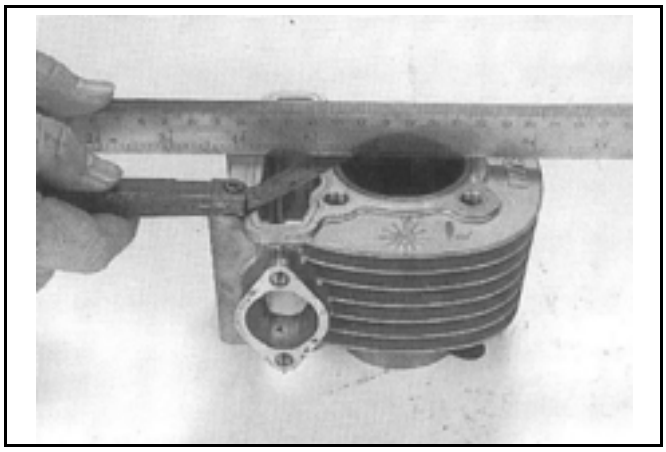

Piston Removal

Plug crankcase opening with a cleaning cloth to prevent from piston pin snap ring or other parts falling into crankcase when disassembling.
Hold another snap ring with pliers.
Push out the piston pin from the side that not removed the snap ring.

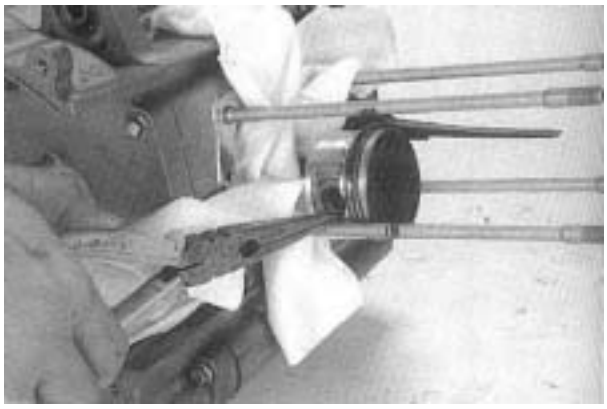

Remove piston rings.

Caution

- Pay attention to remove piston rings because they are fragile.

Disassemble the piston rings.
Check if the piston rings are damaged or its grooves are worn.
Cleaning carbon deposit onto the piston ring grooves.

Install the piston rings and then measure clearance between piston ring and its grooves.
Service Limit: Top ring: replace if over 0.09mm
2nd ring: replace if over 0.09mm

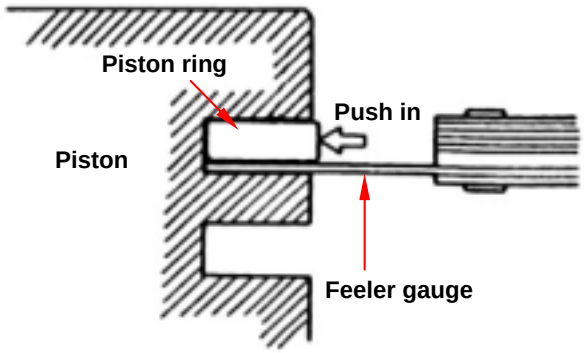

Take out the piston rings and place them respective into cylinder below 20mm of cylinder top. Measure each piston ring gaps.

Caution

- Push the piston rings into cylinder with piston top-end in parallel motion.

Service Limit: Top ring: replace if over 0.5mm
2nd ring: replace if over 0.5mm

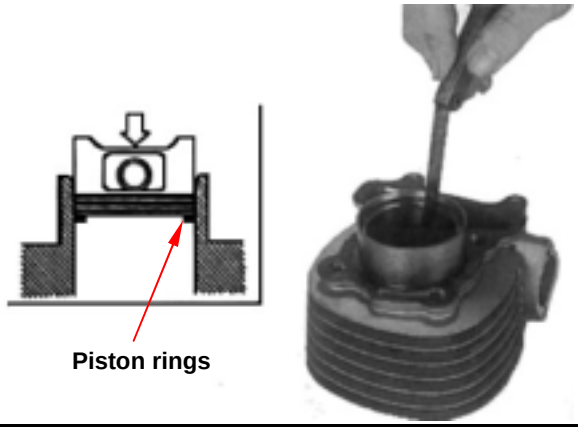

Measure the outer diameter of piston pin.
Service Limit: (Refer to page 2)

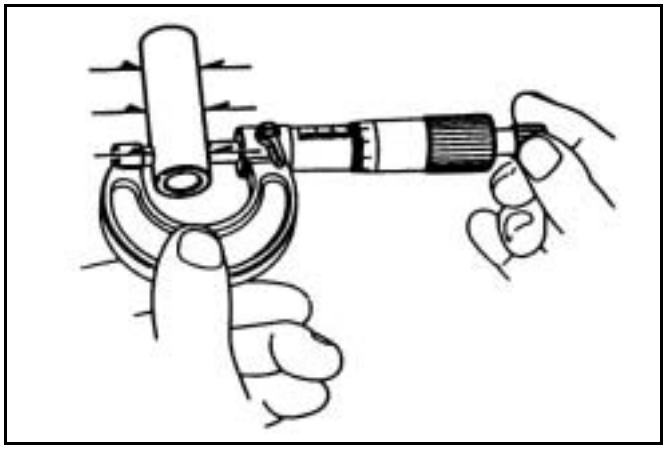

Measure the inner diameter of connecting rod small end.
Service Limit: (Refer to page 2)

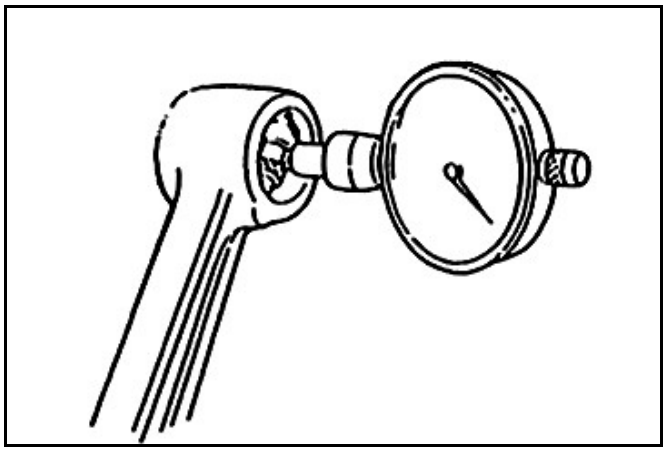

Measure the inner diameter of piston pin hole.
Service Limit: (Refer to page 2)

Calculate clearance between piston pin and its hole.
Service Limit: (Refer to page 2)

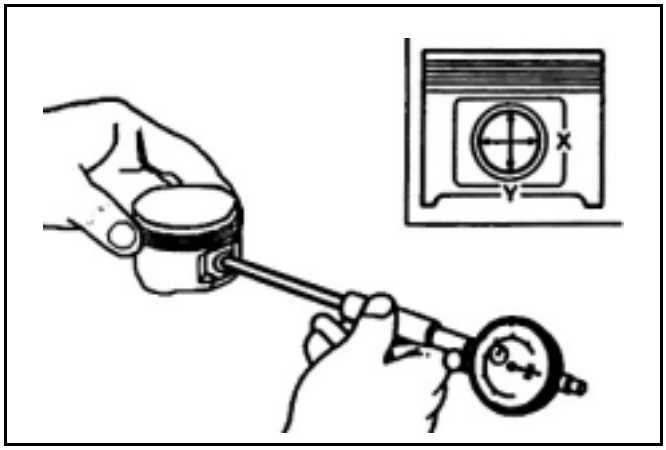

Measure piston outer diameter.

Caution

- The measurement position is 10 mm distance from piston bottom side, and 90° to piston pin.

Service Limit: (Refer to page 2)
Compare measured value with service limit to calculate the clearance between piston and cylinder.

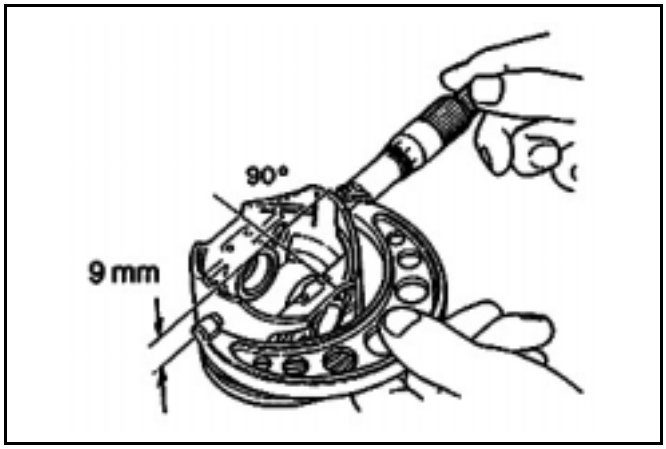

Piston Ring Installation

Clean up piston top, ring groove, and piston shirt.
Install the piston ring onto piston carefully.
Place the openings of piston ring as diagram shown below.

Caution

- Do not damage piston and piston rings as installation.
- All marks on the piston rings must be forwarded to up side.
- Make sure that all piston rings can be rotated freely after installed.

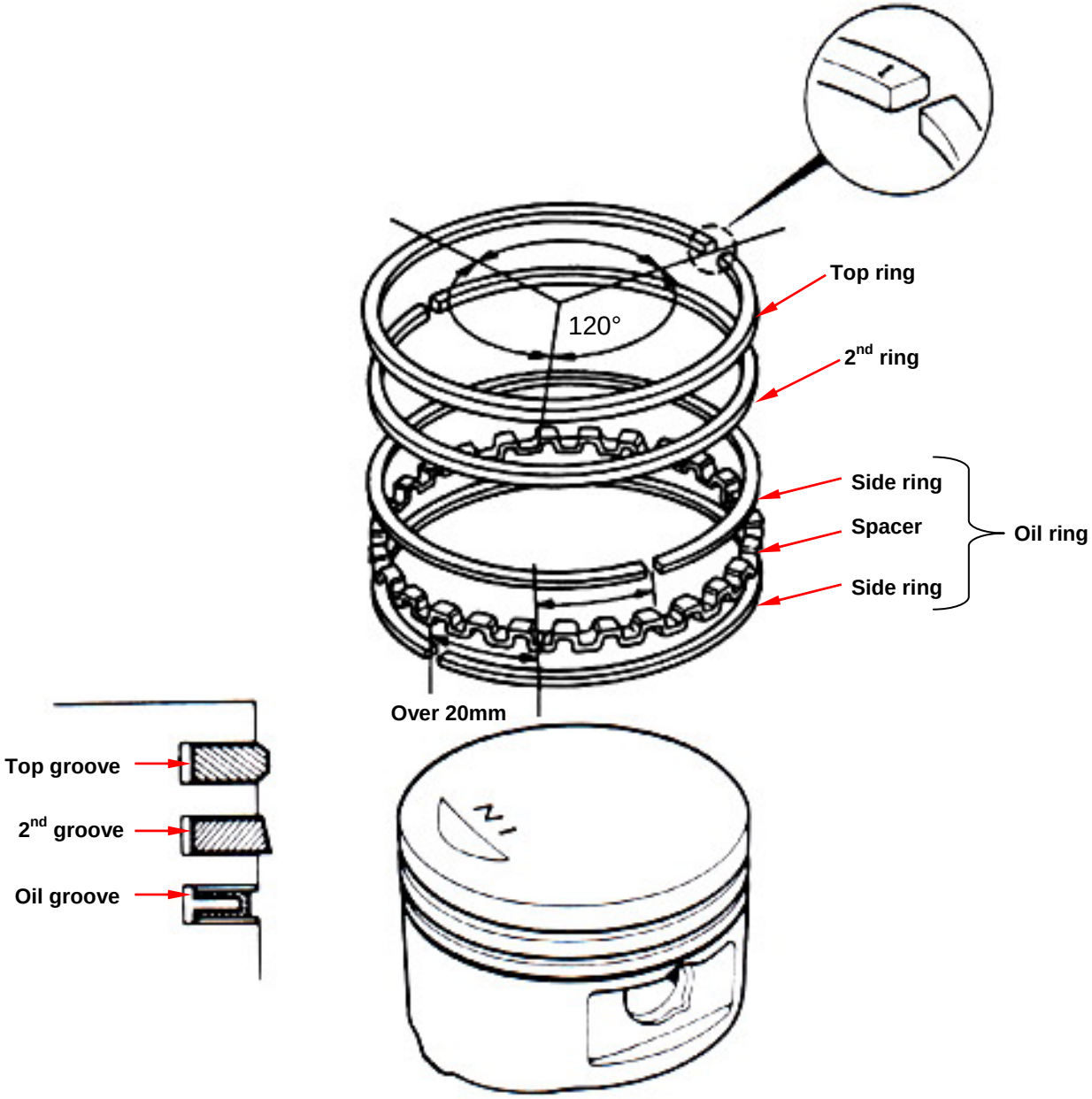

Piston Installation

Install piston and piston pin, and place the IN marks on the piston top side forward to intake valve.
Install new piston pin snap ring.

Caution

- Do not let the opening of piston pin snap ring align with the opening piston ring.
- Place a piece of cloth between piston skirt section and crankcase in order to prevent snap ring from falling into crankcase as operation.

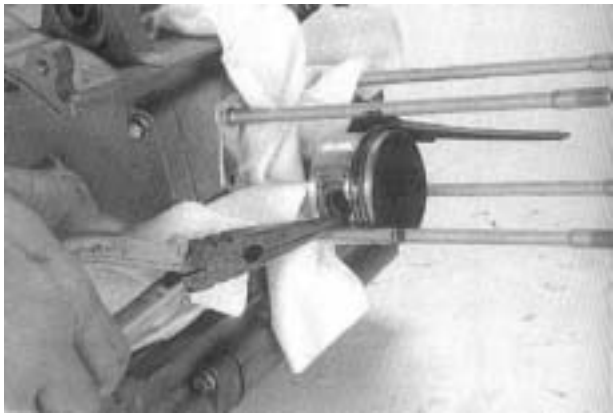

Cylinder Installation

Clean up all residues and foreign materials on the matching surface of crankcase. Pay attention to not let these residues and foreign materials fall into crankcase.

Caution

- To soap the residues into solvent so that the residues can be removed more easily.

Coat engine oil to inside of cylinder, piston and piston rings.
Care to be taken when installing piston into cylinder. Press piston rings in one by one as installation.

Caution

- Do not push piston into cylinder forcefully because this will cause the piston and the piston rings to be damaged.

Install the cam chain plate, the cylinder gasket and lock pins.
Install cylinder head (refer to Chapter 6)
Install the cam chain auto-tensioner. (2 bolts)

Mechanism Illustrations ·····8-1	Kick Starter ····· 8-3
Operational Precautions ·····8-2	Drive Belt ····· 8-5
Trouble Diagnosis ·····8-2	Movable Drive Face ····· 8-7
Left Crankcase Cover ·····8-3	Clutch / Driven Pulley ····· 8-10

Mechanism Illustrations

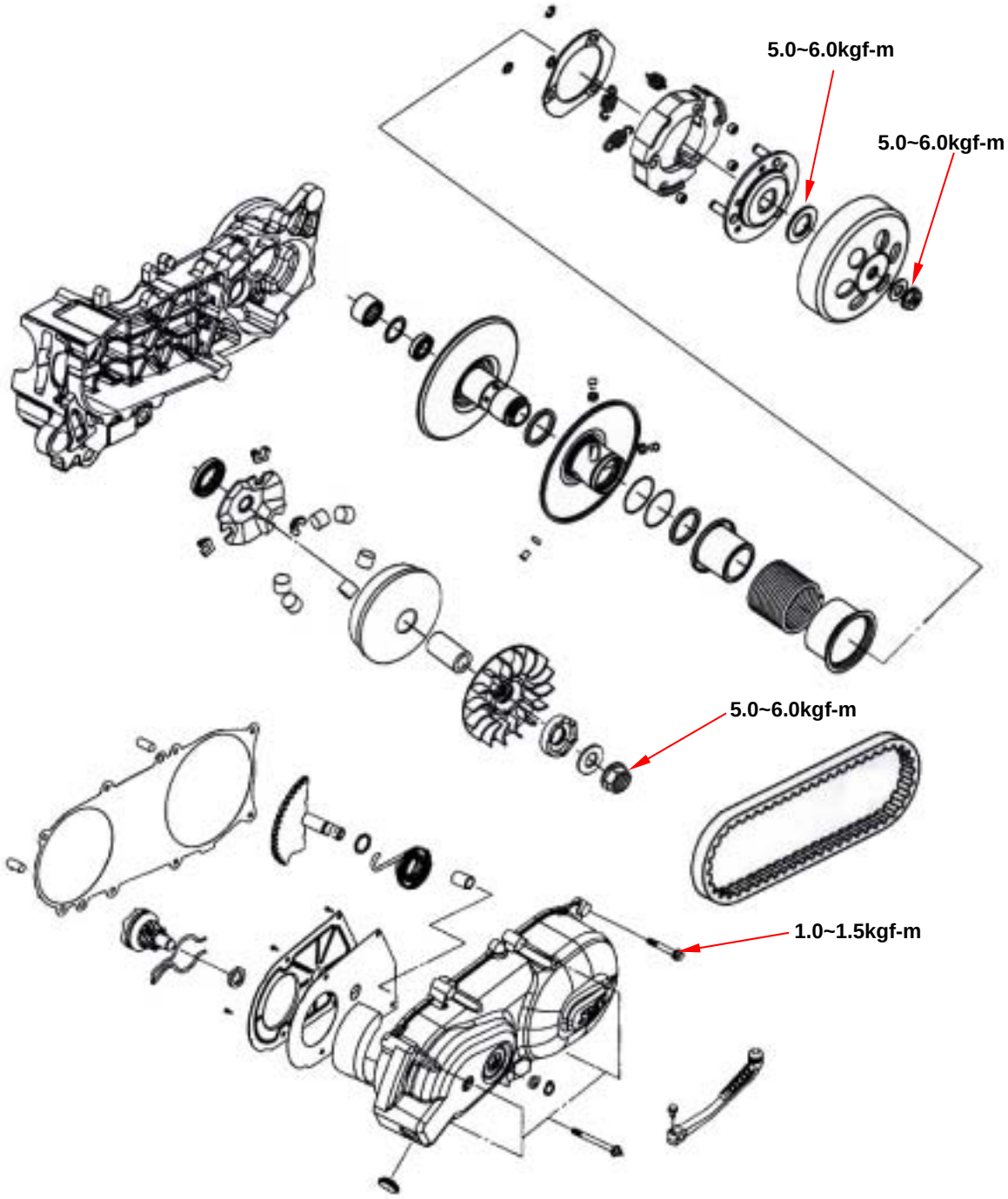

Operational Precautions

General Information

- Movable drive face, clutch, and driven pulley can be serviced on the motorcycle.
- Drive belt and driven pulley surface must be free of grease.

Specification

Unit: mm

	HU10U/W		HU05U	
Item	Standard value	Limit	Standard value	Limit
Drive belt width	17.800~18.200	17.200	17.800~18.200	17.200
ID of movable drive face	23.989~24.052	24.060	23.964~23.985	24.015
OD of drive face boss	23.960~23.974	23.940	23.910~23.926	23.890
OD of roller	15.920~16.080	15.400	15.920~16.080	15.400
ID of clutch outer	112.000~122.200	112.500	107.000~107.200	107.500
Thickness of clutch lining	2.000	1.500	2.00	1.500
Free length of driven pulley spring	——	156.000	——	87.900
OD of driven pulley	33.965~33.985	33.940	33.965~33.985	33.940
ID of sliding driven pulley	34.000~34.025	34.060	34.000~34.025	34.060

Torque value:

Movable drive face nut: 5.0~6.0kgf-m

Clutch outer nut: 5.0~6.0kgf-m

Driven pulley nut: 5.0~6.0kgf-m

Special Service Tools

Clutch spring compressor SYM-2301000

Bearing puller (inner type) SYM-6204002

Clutch mounting nut wrench SYM-9020200

Universal fixture SYM-2210100

Trouble Diagnosis

Engine can be started but motorcycle can not be moved

1. Worn drive Belt
2. Worn ramp plate
3. Worn or damaged clutch lining
4. Broken driven pulley

Shudder or misfire when driving

1. Broken clutch lining
2. Worn clutch lining

Insufficient horsepower or poor high speed performance

1. Worn drive belt
2. Insufficient spring capacity of driven pulley
3. Worn roller
4. Driven pulley operation un-smoothly

Left Crankcase Cover

Left crankcase cover removal

Remove body cover
Remove air cleaner (2 bolts)

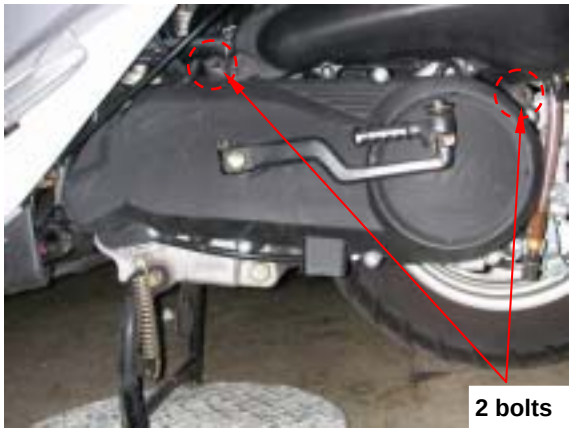

Remove left crankcase cover (8 bolts).

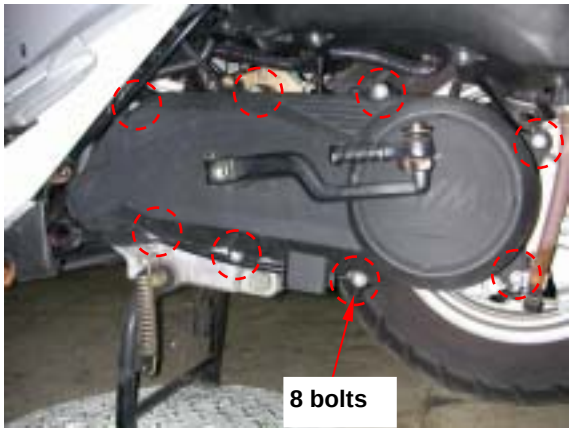

Installation of the left crankcase cover

Install the left crankcase cover (8 bolts)
Tighten the air cleaner (2 bolts)

Kick Starter

Disassembly

Remove left crankcase cover.
Remove kick starter arm (1 bolt).

Remove snap ring and thrust washer from left crankcase cover.

Remove the inner plate inside of left crankcase cover. (6 screws)

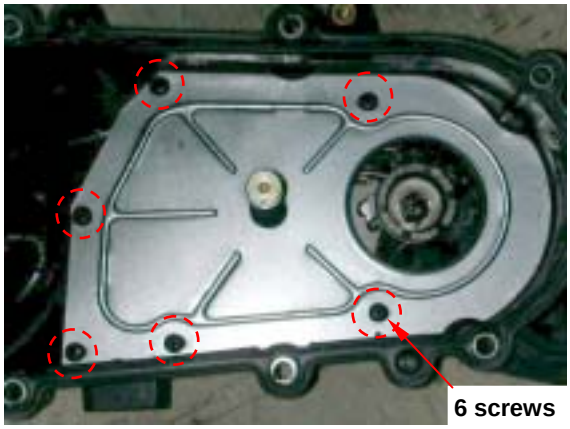

Install kick starter arm, rotate the lever slightly and then remove driven gear and washer. Remove the kick starter arm, kick starter spindle, spindle bush and return spring as well as socket.

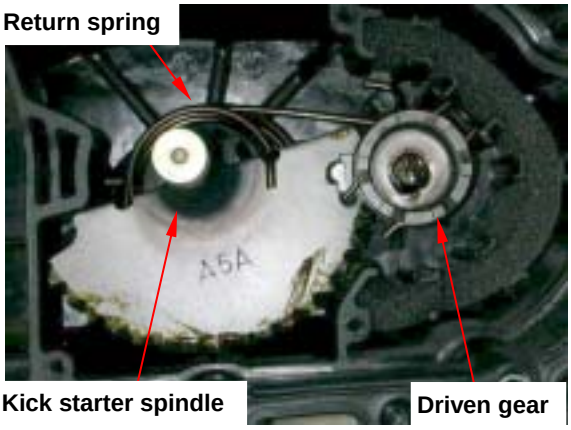

Inspection

Check if kick starter spindle, kick spindle bush, kick driven gear for wear or damage.
Replace it with new one if necessary.
Check the return spring and friction spring for spring force or damaged.
Replace it with one if poor parts found.

Reassembly

Install socket, return spring and starter shaft as diagram shown.
Install thrust washer and snap ring onto starter shaft.
Install kick starter lever temporary.
Rotate the lever and then align driving gear with width-tooth on the starter shaft.
Install the friction of driving gear onto convex part of the cover.
Install the left crankcase cover.

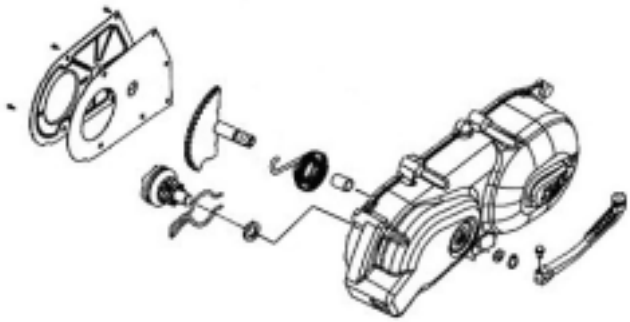

Drive Belt

Removal

Remove left crankcase cover
Hold drive face with universal fixture, and remove nut and drive face.
Special Service Tool:
Universal fixture SYM-2210100

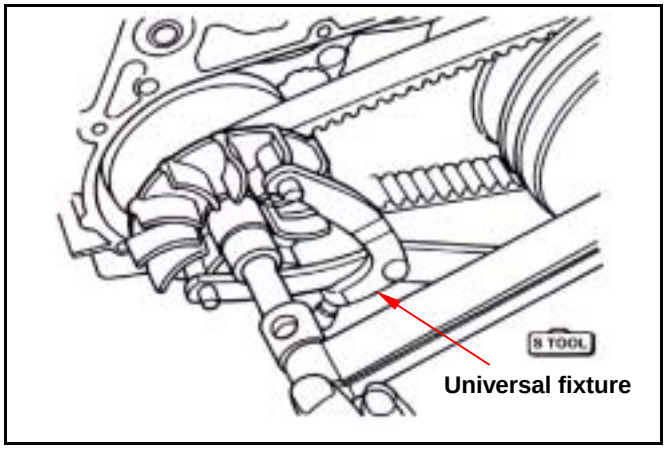

Hold the clutch outer with the universal fixture, and the remove the nut and the clutch outer.

Caution

- Using special service tools for tightening or loosening the nut. Fixed rear wheel or rear brake only will damage reduction gear system.

Special Service Tool:
Universal fixture SYM-2210100

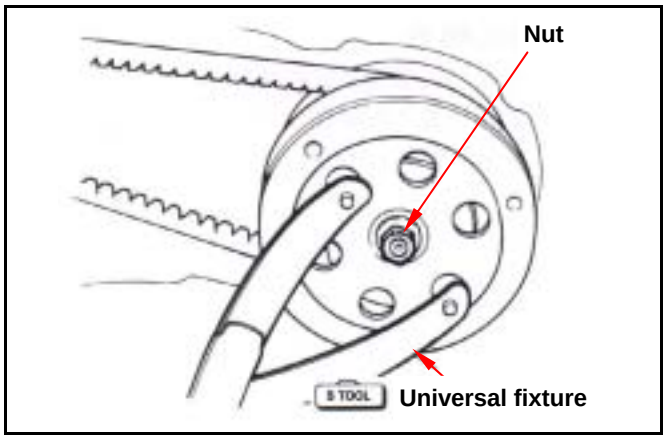

Push the drive belt into belt groove as diagram shown so that the belt can be loosened, and then remove.
Drive belt and clutch at same time.

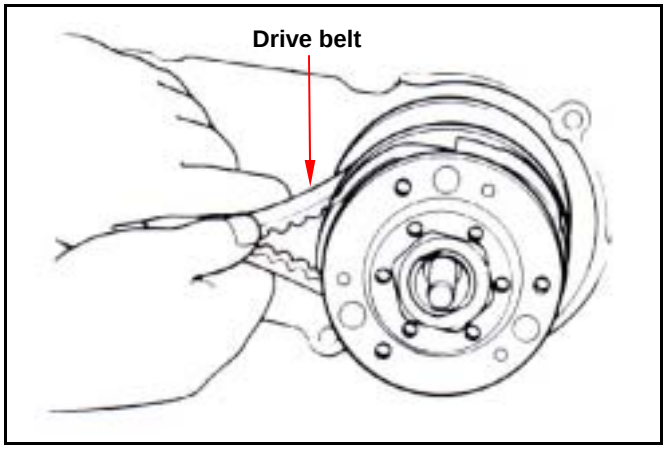

Inspection

Check the drive belt for crack or wear. Replace it if necessary.
Measure the width of drive belt as diagram shown.
Replace the belt if exceeds the service limit.
Service Limit: 17.2mm

Caution

- Using the genuine parts for replacement.
- The surfaces of drive belt or pulley must be free of grease.
- Clean up all grease or dirt before installation.

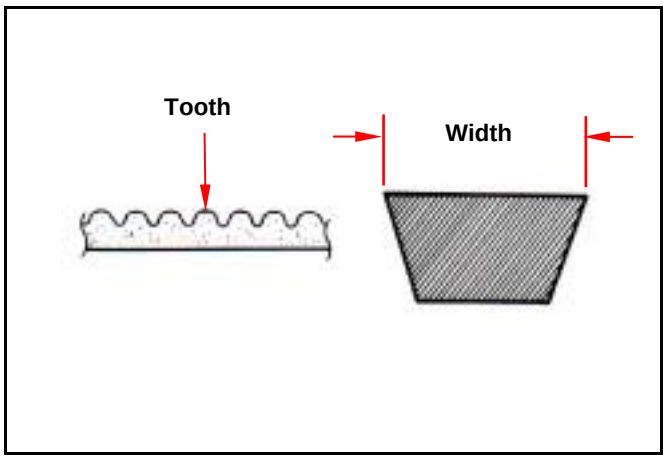

Installation

Pull out the sliding driven face and then insert the drive belt into the driven pulley.

⚠ Caution

- Pull out sliding driven face and then insert the drive belt into the driven pulley so that the drive belt set can be installed onto pulley more easily.

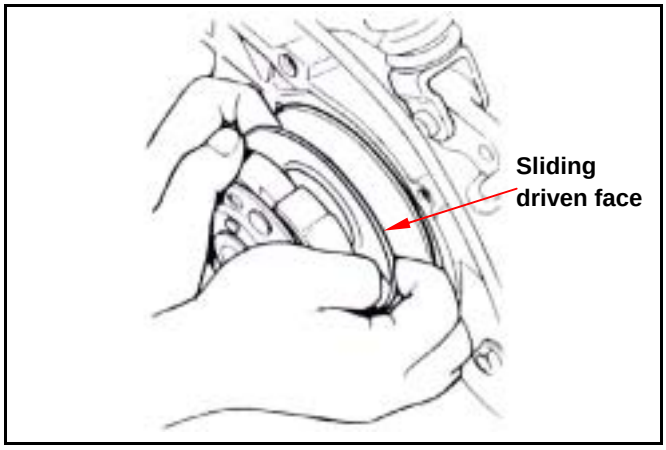

Install the clutch set with drive belt onto the drive shaft.
The other end of belt install onto the movable drive face.
Install the clutch outer.

Install the clutch with universal fixture, and then tighten nut to specified torque value.
Torque value: 5.0~6.0kgf-m
Special Service Tool:
Universal fixture SYM-2210100

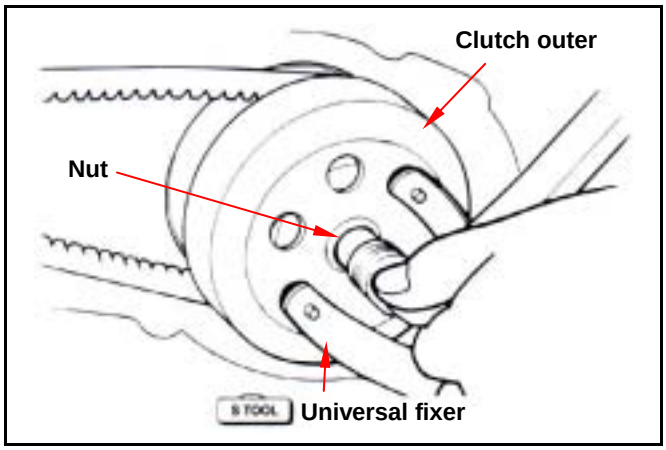

⚠ Caution

- When install the drive belt, if there is a arrow mark, then the arrow mark must point to rotation motion. If not, the letters on the belt must be forwarded to assembly direction.

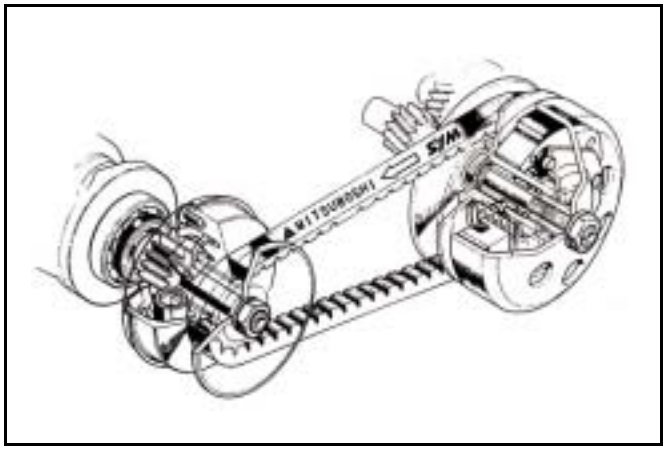

Movable Drive Face

Removal

Remove left crankcase cover.
Hold drive face with universal fixture, and then remove drive face nut.
Remove drive face.

Special Service Tool:
Universal fixture SYM-2210100

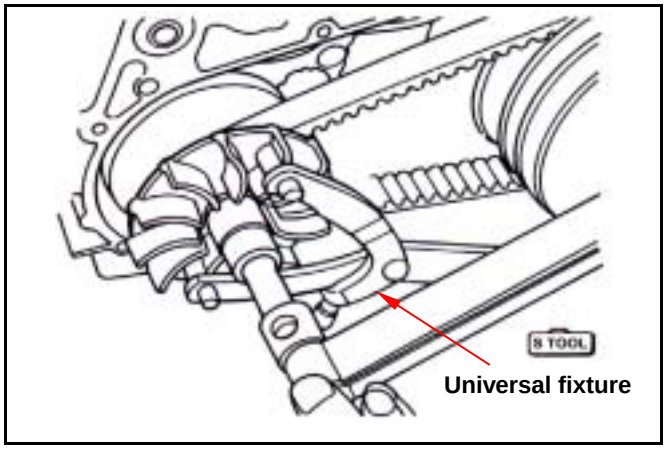

Take out the drive belt from the drive face.
Remove movable drive face set and drive face boss from crankshaft.

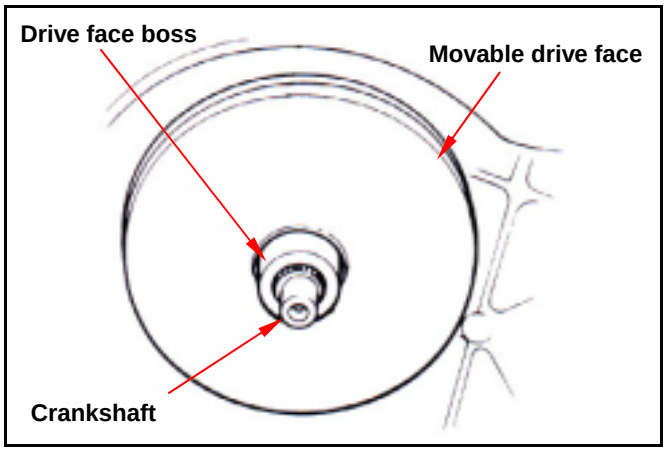

Remove ramp plate.

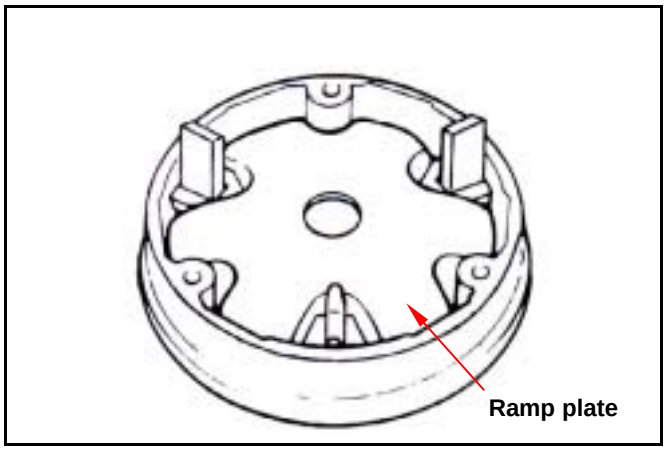

Remove weight rollers from movable drive face.

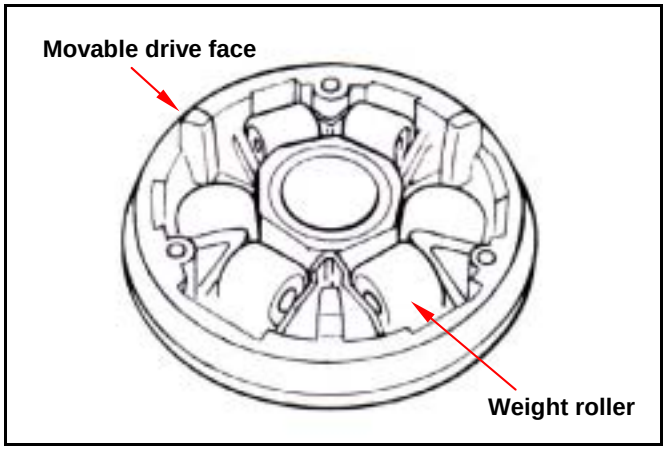

Inspection

The operation of movable drive face is means of the weight roller to pressing on it with centrifuge force. And then the speed is changed by the ramp plate rotation.
Thus, if weight rollers are wear out or damage, the centrifuge force will be effected.
Check if rollers are wear out or damage. Replace it if necessary.
Measure each rollers' outer diameter. Replace it if exceed the service limit.
Service limit: 15.4mm

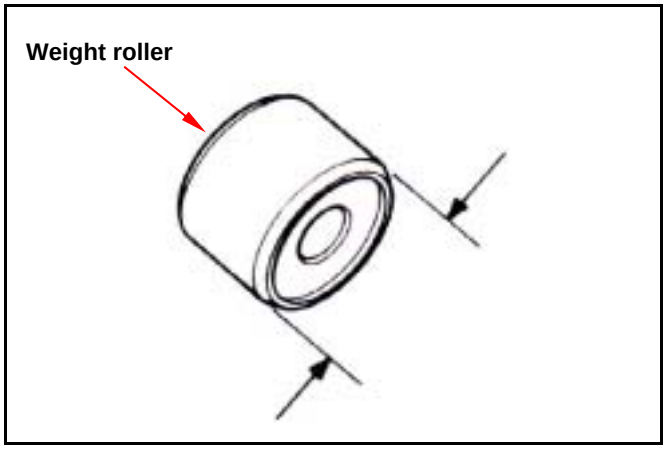

Check the drive face boss if damaged or wear out. Replace it if necessary.
Measure the drive face boss outer diameter. Replace it if exceed the service limit
Service limit:
HU01U/W 23.94mm
HU05U 23.89mm
Measure the drive face boss's inner diameter. Replace it if exceed the service limit.
Service limit:
HU01U/W 24.060mm
HU05U 24.015mm

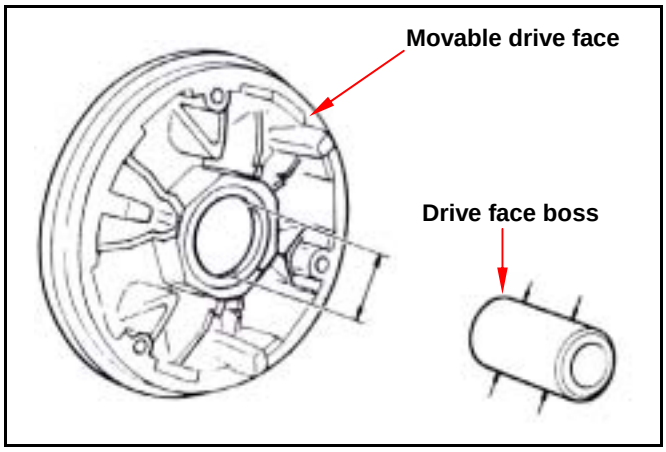

Assembly / Installation

Install the weight roller.

⚠ Caution

- The both ends of weight roller are different. In order to prolong the roller life span and prevent abnormal wearing out, install the closed end onto the movable drive face in the movement of CCW.

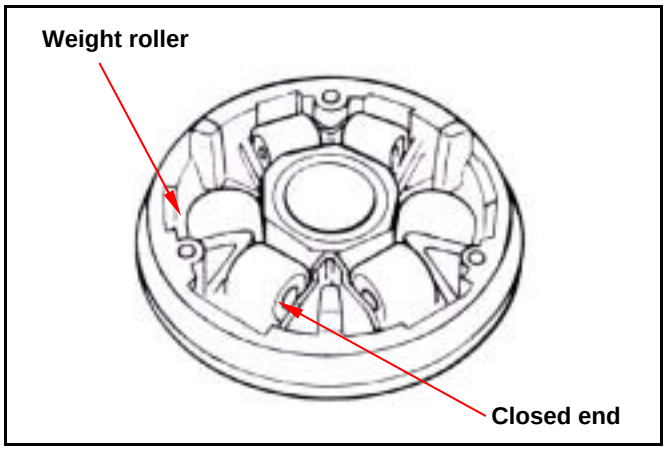

Install the ramp plate slide pieces (3 pieces) onto the ramp plate.
Install the ramp plate.

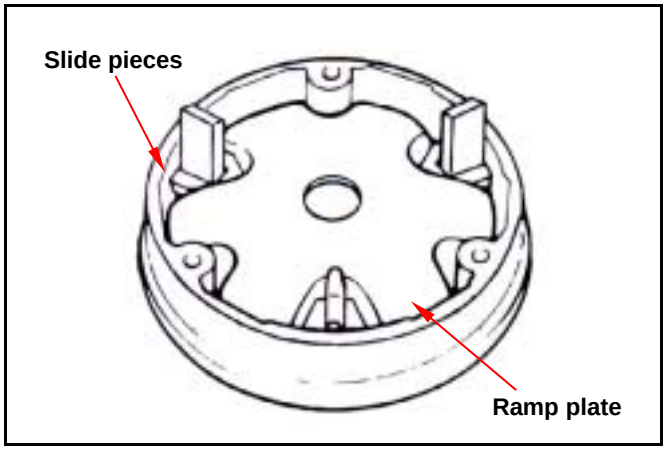

Apply with some grease to inside of drive face boss hole, and install drive face boss.

Caution

- The drive face surface has to be free of grease. Clean it with cleaning solvent.

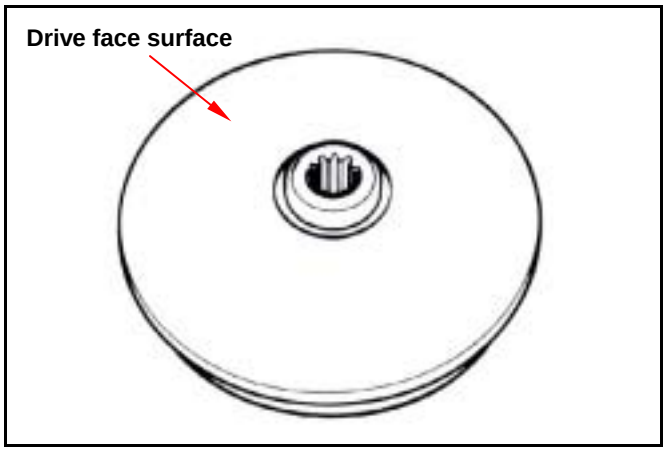

Install movable drive face assembly onto crankshaft.

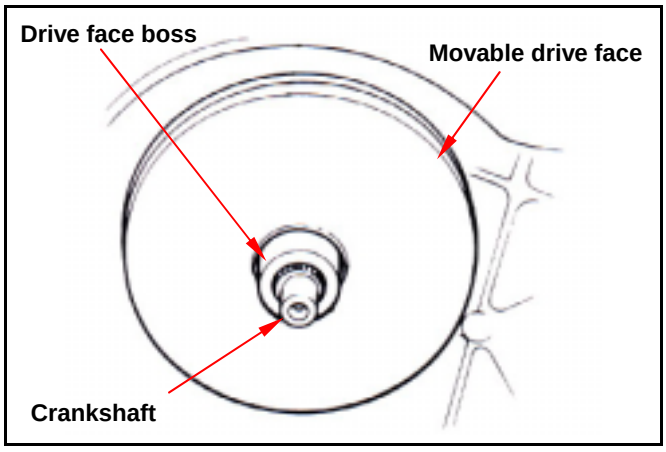

Movable Drive Face Installation

Press drive belt into movable drive face, and then press down the up & down sides of the drive belt to separate it away from the drive face boss.

Caution

- To press down the up & down sides of the drive belt can avoid to pressing and damaging the belt when installing the drive face, and also can make sure that the drive face can be tighten.

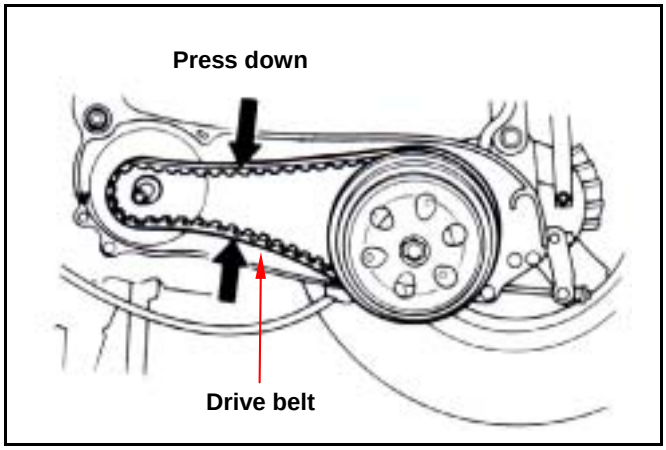

Install drive face, washer and nut.

Caution

- Make sure that two sides of pulley surfaces have to be free of grease. Clean it with cleaning solvent.

Holds drives face with universal fixture.
Tighten nut to specified torque.
Torque value: 5.0~6.0kgf-m
Install left crankcase cover.

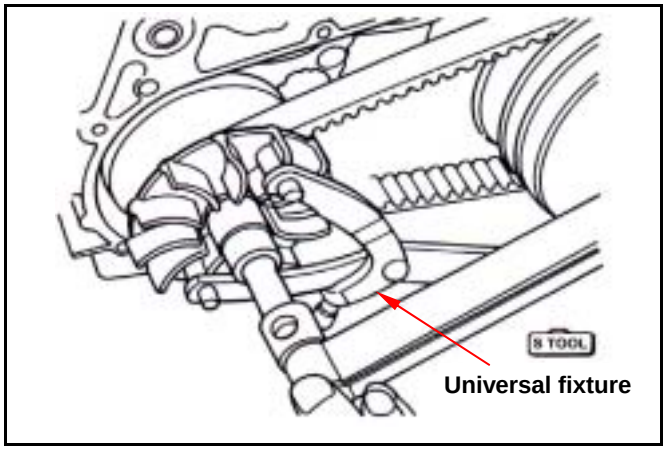

Clutch / Driven Pulley

Disassembly

Remove drive belt and clutch / driven pulley.
Install clutch spring compressor onto the pulley assembly, and operate the compressor to let nut be installed more easily.

⚠ Caution

- Do not press the compressor too much.

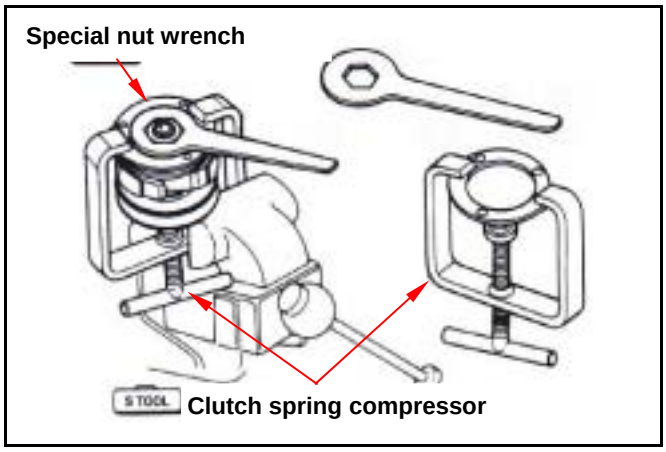

Hold the clutch spring compressor onto bench vise, and then remove mounting nut with special nut wrench.
Release the clutch spring compressor and remove clutch and spring from driven pulley.

Special Service Tool:

Clutch spring compressor	**SYM-2301000**
Clutch mounting nut wrench	**SYM-9020200**

Remove oil seal collar from driven pulley.

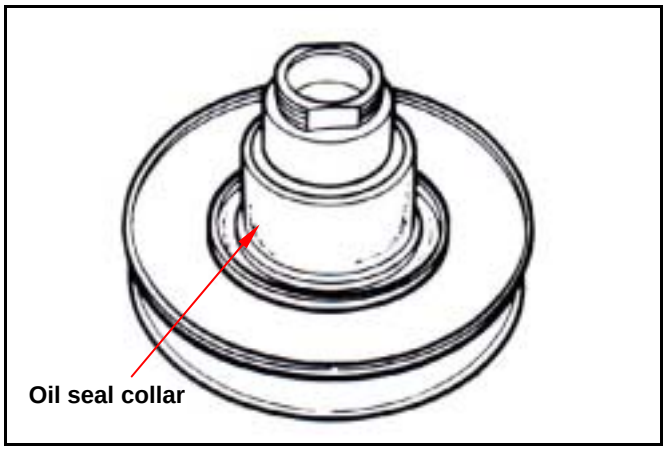

Remove guide pin, guide pin roller, and sliding driven face, and then remove O-ring & oil seal seat from sliding pulley.

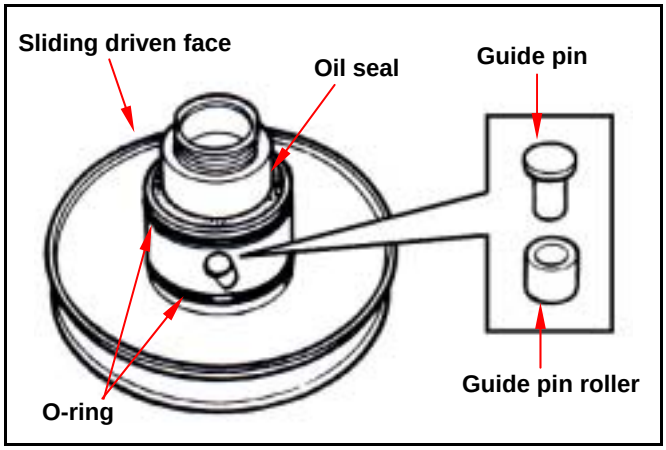

Inspection

Clutch outer

Measure the inner diameter of clutch outer friction face. Replace the clutch outer if exceed service limit.

Service limit:

HU01U/W	**112.5mm**
HU05U	**107.5mm**

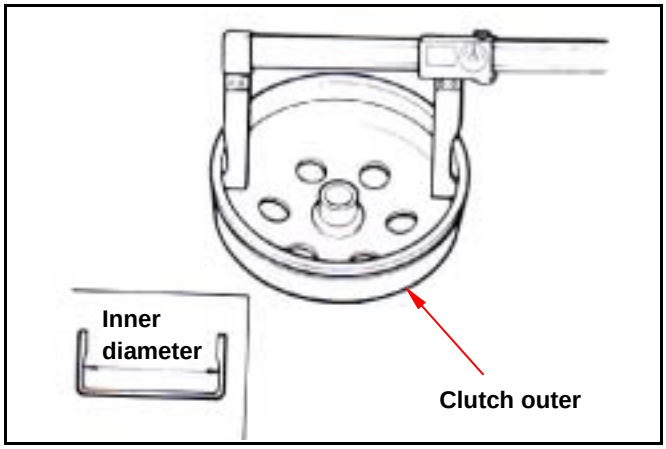

Clutch lining

Measure each clutch lining thickness. Replace it if exceeds service limit.

Service limit: 2.0mm

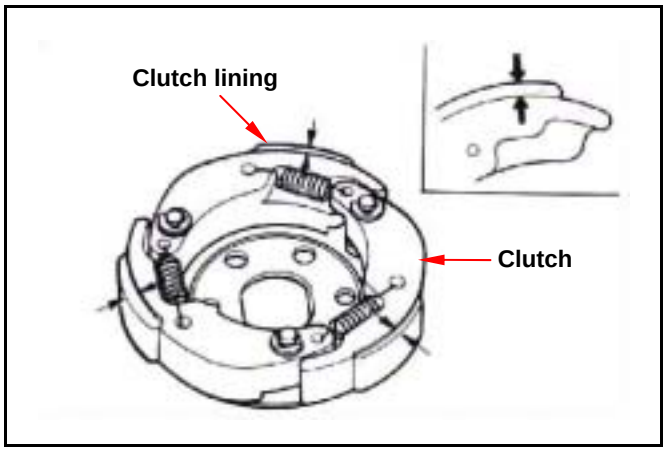

Driven pulley spring

Measure the length of driven pulley spring.
Replace it if exceeds service limit

Service limit:

HU01U/W	**156.0mm**
HU05U	**87.9mm**

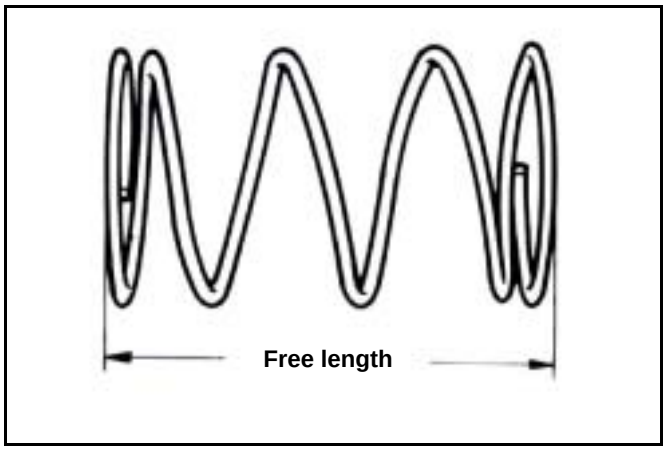

Driven pulley

Check following items:

- If both surfaces are damage or wear.
- If guide pin groove is damage or wear.
- Replace damaged or worn components.

Measure the outer diameter of driven surface and the inner diameter of driven pulley.
Replace it if exceeds service limit.

Service limit: Outer diameter 33.94mm
Inner diameter 34.06mm

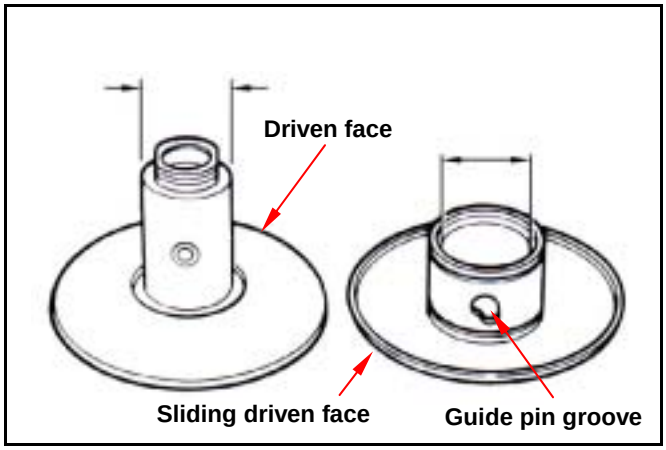

Driven Pulley Bearing Inspection

Check if the inner bearing oil seal is damage.
Replace it if necessary.
Check if needle bearing is damage or too big clearance. Replace it if necessary.
Rotate the inside of inner bearing with fingers to check if the bearing rotation is in smooth and silent.
Also check if bearing outer is installed properly.
Replace it if necessary.

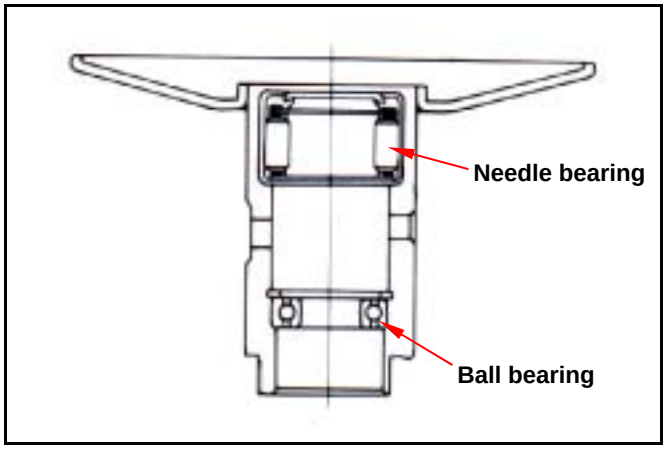

Clutch Block Replacement

Remove snap and washer, and the remove clutch block and spring from driving plate.
Check if spring is damage or insufficient elasticity.

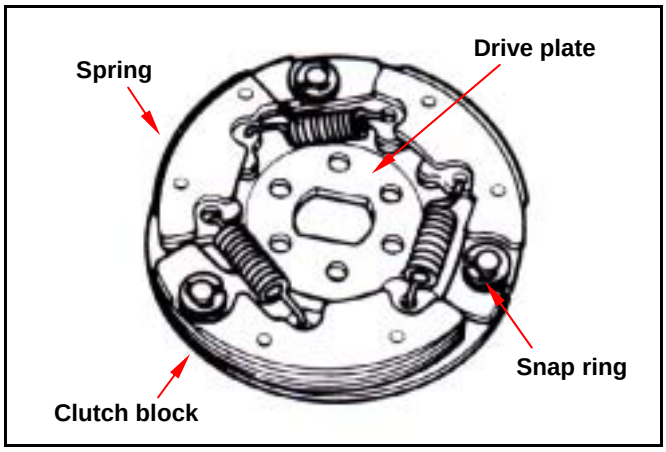

Check if shock absorption rubber is damage or deformation. Replace it if necessary.
Apply with grease onto setting pins.

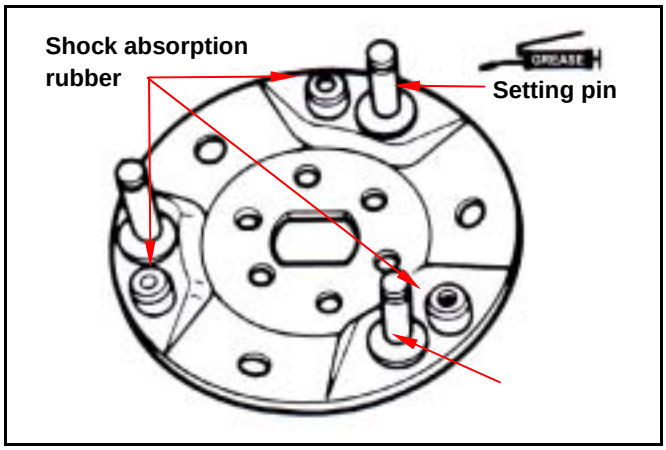

Apply with grease onto setting pins. But, the clutch block should not be greased. If so, replace it.
Install new clutch block onto setting pin and then push to specified location.

⚠ Caution

- Grease or lubricant will damage the clutch block and affect the block's connection capacity.

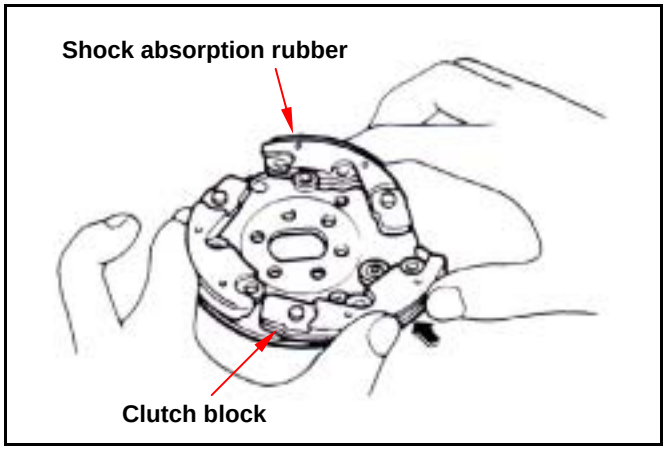

Install the spring snap into groove with pliers.

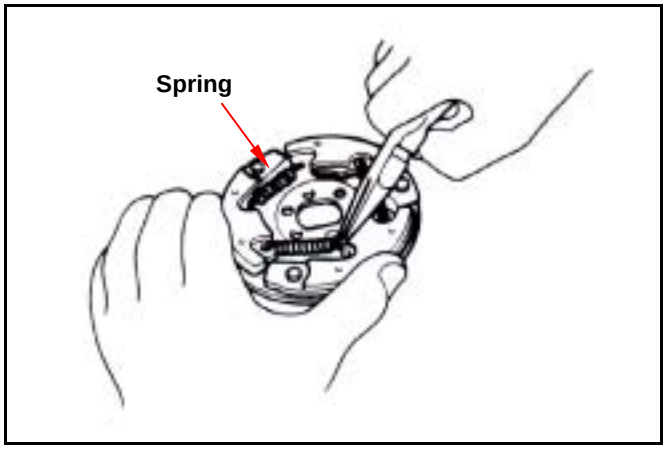

Install snap ring and mounting plate onto setting pin.

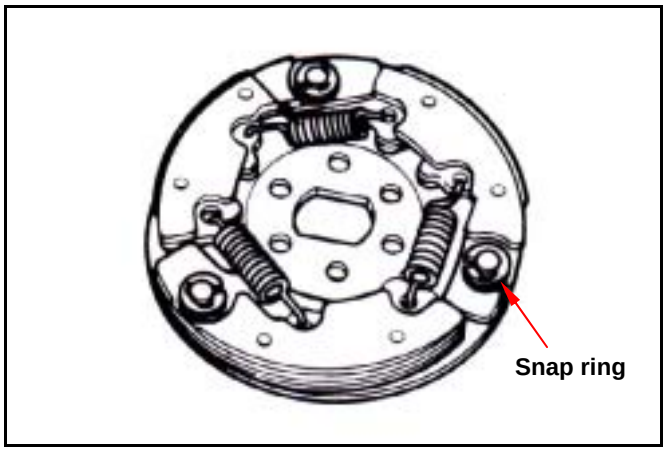

Replacement of Driven Pulley Bearing

Remove inner bearing.

Caution

- If the inner bearing equipped with oil seal on one side in the driven pulley, then remove the oil seal firstly.
- If the pulley equipped with ball bearing, it has to remove snap ring and then the bearing.

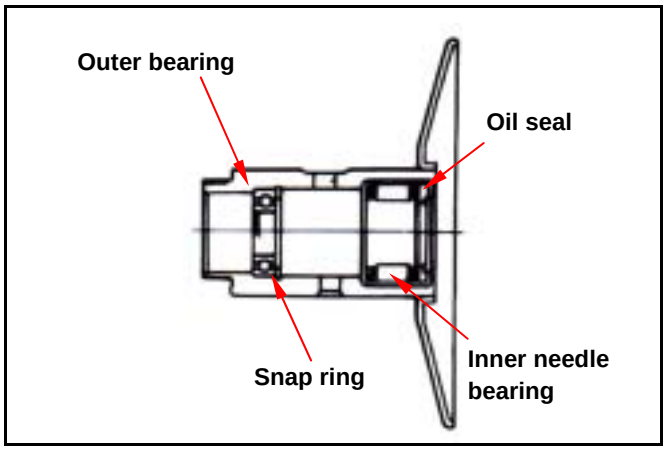

Remove snap ring and then push bearing forward to other side of inner bearing.
Place new bearing onto proper position and its sealing end should be forwarded to outside.
Apply with specified grease.
Recommended to use the KING MATE G-3.
Install the snap ring and hold the bearing.

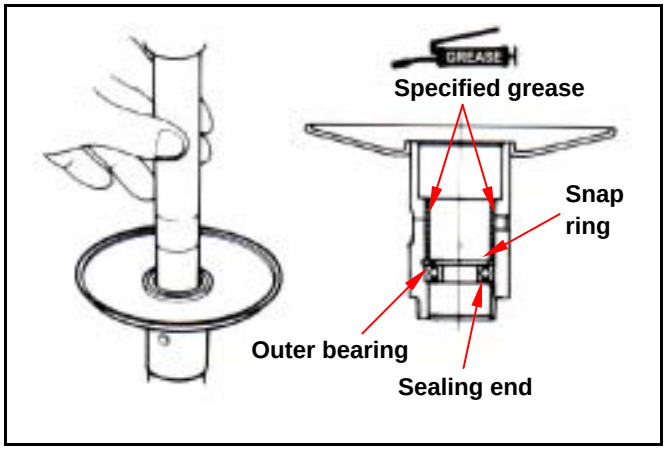

Install a new inner bearing.

Caution

- Its sealing end should be forwarded to outside as bearing installation.
- Install needle bearing with hydraulic presser. Install ball bearing by means of hydraulic presser.

Align oil seal lip with bearing, and then install the new oil seal (if necessary).

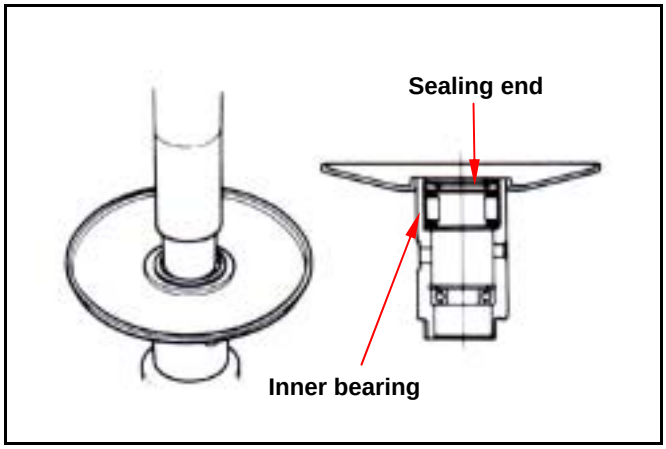

Installation of Clutch / Driven Pulley Assembly

Install new oil seal and O-ring onto sliding driven face. Apply with specified grease to lubricate the inside of sliding driven face.

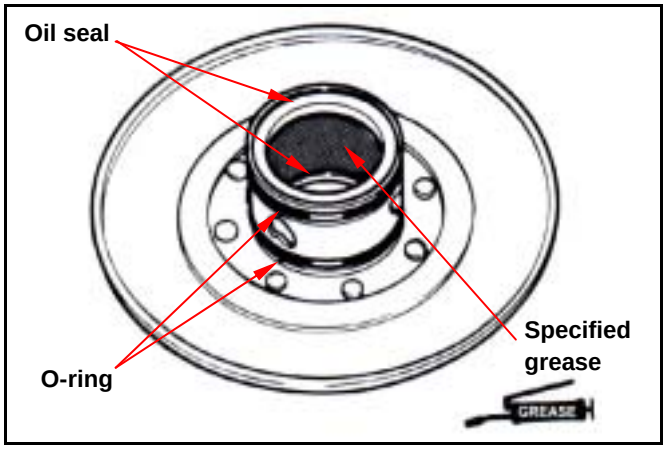

Install sliding driven face onto driven face.
Install guide pin and guide pin roller.

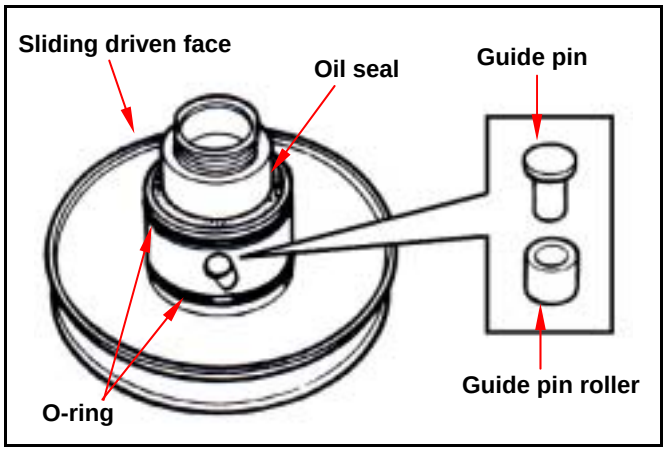

Install oil seal collar.

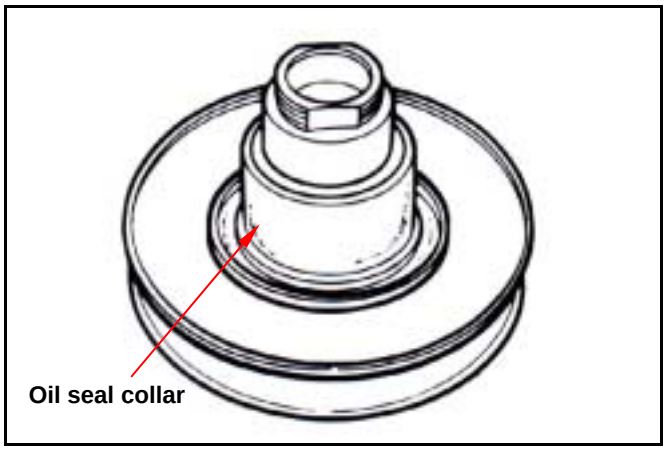

Install driven pulley spring and clutch into clutch spring compressor, and press down the assembly by turning manual lever until mounting nut that can be installed.
Hold the compressor by bench vise and tighten the mounting nut to specified torque with special nut wrench.
Remove the clutch spring compressor.
Torque value: 5.0~6.0kg-m
Install clutch/driven pulley and driving belt onto driving shaft.

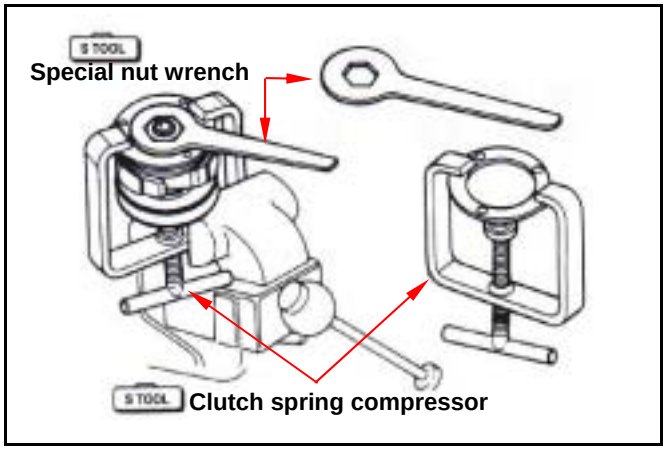

Mechanism Illustrations ····· 9-1
Operational Precautions ····· 9-2
Trouble Diagnosis ····· 9-2
Disassembly of Final Drive Mechanism ····· 9-3
Inspection of Final Drive Mechanism ··· 9-4
Bearing Replacement ····· 9-5
Re-assembly of Final Driven Mechanism ····· 9-7

Mechanism Illustrations

HU10U/W

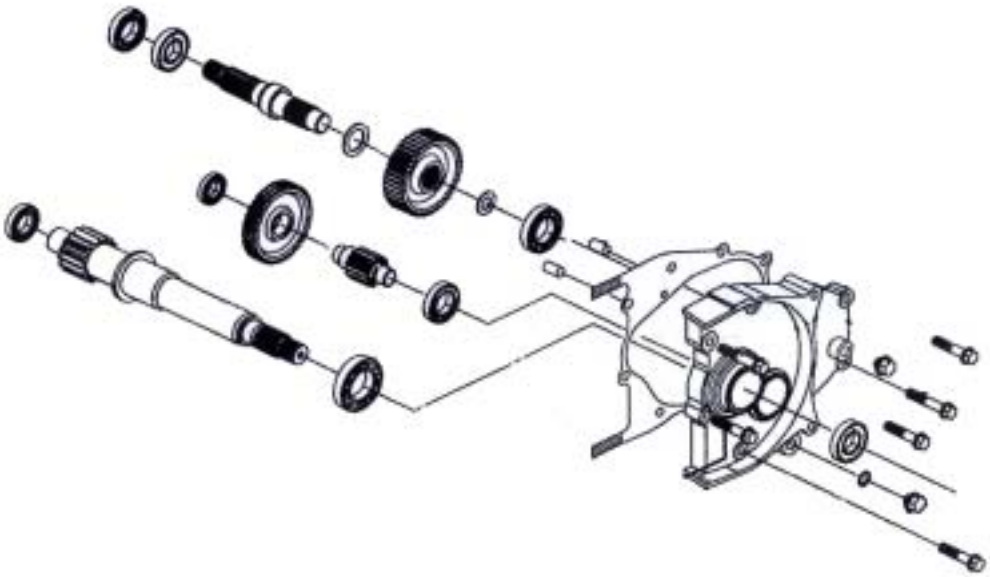

HU05U

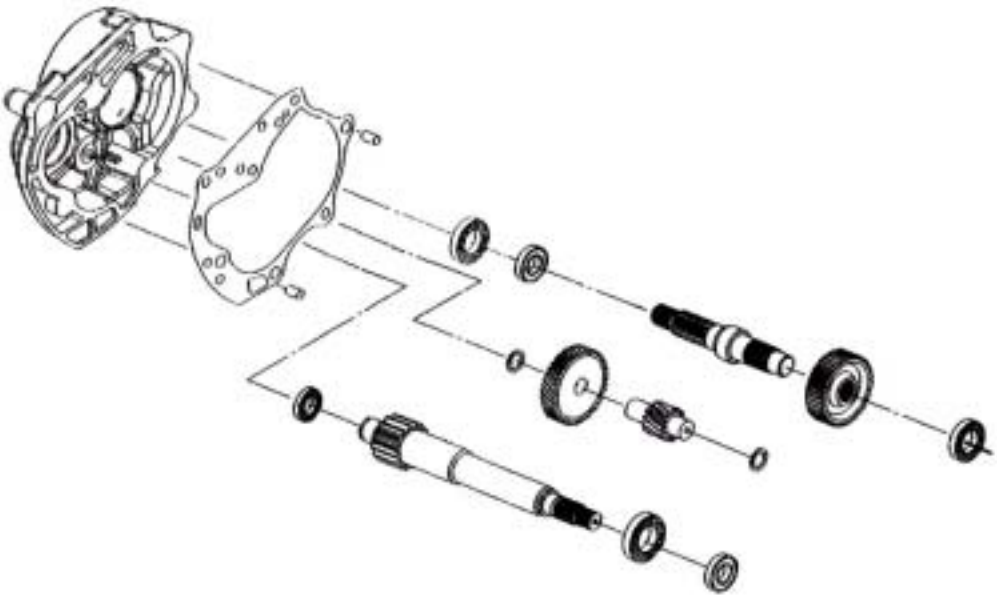

Operational Precautions

Specification

Application gear oil: GEAR OIL SAE 85W-140
Recommended oil: KING MATE serial gear oils
Oil quantity:

HU10U/W	110 c.c. (100 c.c. when replacing)
HU05U	100 c.c. (90 c.c. when replacing)

Torque value

Gear box cover	2.0~2.4kgf-m
Gear oil drain plug	1.0~1.4kgf-m
Gear oil filling bolt	0.8~1.2kgf-m

Special service tools

Inner type bearing puller	SYM-6204002
Outer type bearing puller	SYM-6204001
Gear box oil seal installer	SYM-9120200
Gear box bearing installer	SYM-9125500
Bearing (6204) installer	SYM-9110400
Bearing (6301) installer	SYM-9610000
Bearing (6203/6004UZ) installer	SYM-9620000
Drive shaft puller	SYM-13000
Puller set	SYM-13000-01

Trouble Diagnosis

Engine can be started but motorcycle can not be moved.

- Damaged drive gear.
- Burnt out drive gear.
- Broken drive belt.

Noise

- Worn or burnt gear.
- Worn gear.

Gear oil leaks

- Excessive gear oil.
- Worn or damage oil seal.

Disassembly of Final Drive Mechanism

HU05U

Remove the rear wheel (refer to chapter 15).
Remove the clutch.
Drain gear oil out from gear box.
Remove gear box cover and then remove the cover and the drive shaft. (7 screws)

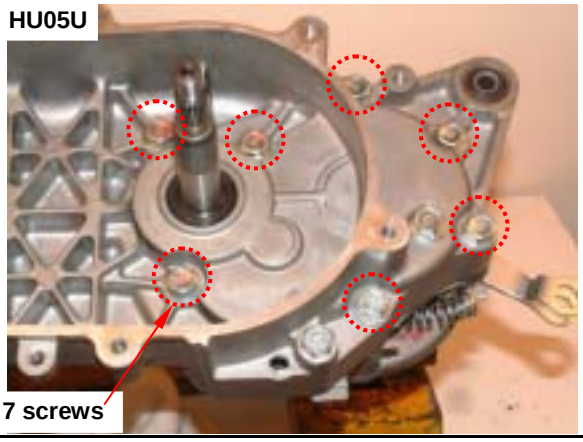

Remove counter shaft and gear.
Remove final driven gear and shaft.
Remove drive shaft.
Remove gasket and dowel pins.

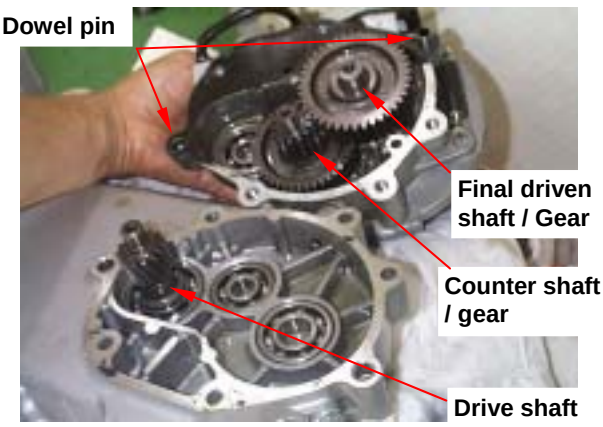

HU10U/W

Remove the rear wheel (refer to chapter 15).
Remove the clutch.
Drain gear oil out from gear box.
Remove gear box cover and then remove the cover and the drive shaft. (7 screws)

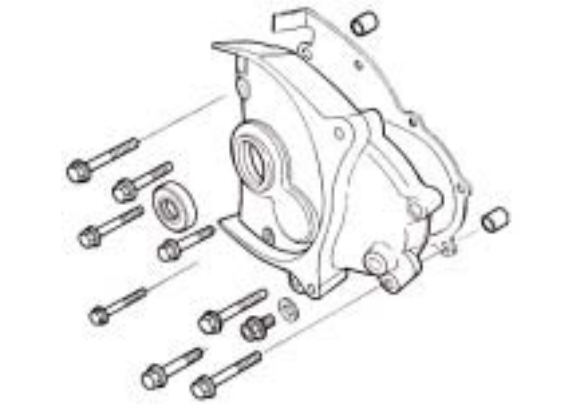

Remove counter shaft and gear.
Remove final driven gear and shaft.
Remove gasket and dowel pins.

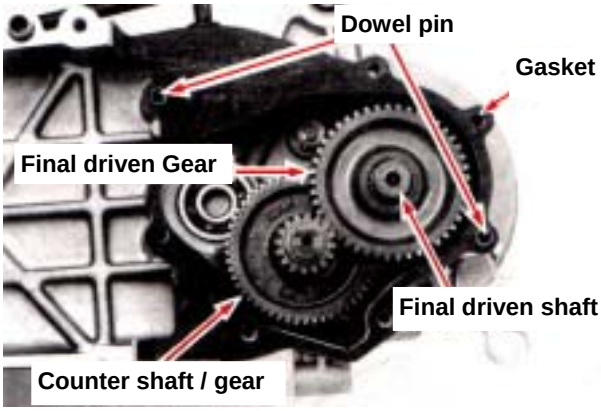

Inspection of Final Drive Mechanism

Check if the countershaft and the gear are worn out or damage.

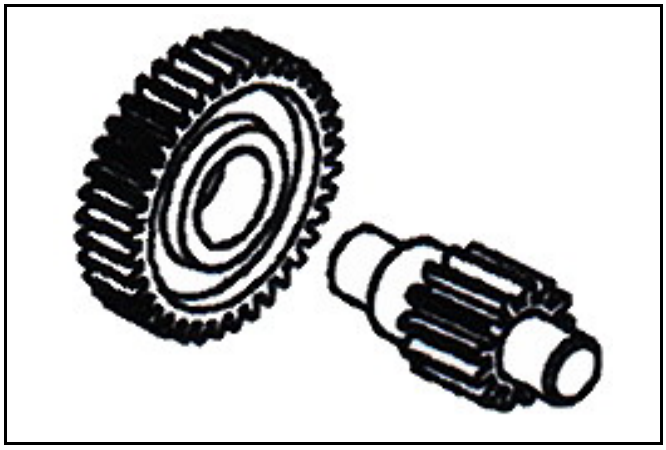

Check if the final driven shaft and gear are wear out or damage.

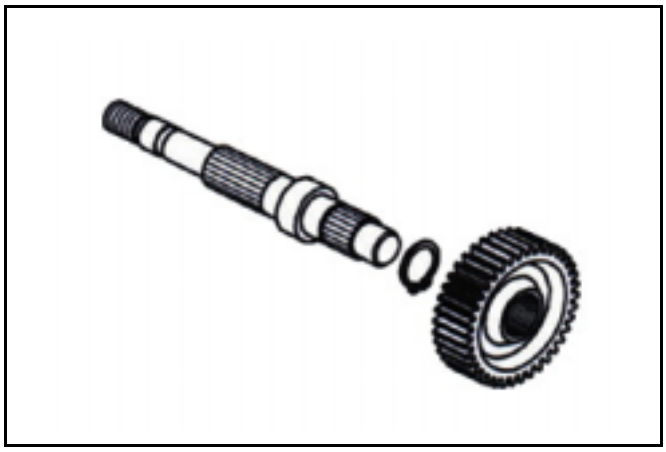

Check bearings on gear box and cover.
Rotate each bearing's inner ring with fingers.
Check if bearings can be turned in smooth and silent, and also check if bearing outer ring is mounted on gear box & cover tightly.
If bearing rotation is uneven, noising, or loose bearing mounted, then replace it.
Check oil seal for wear or damage, and replace it if necessary.

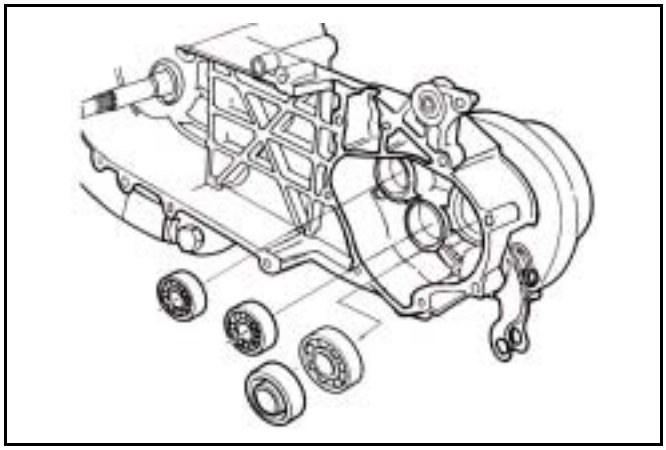

Caution

- Do not remove the drive shaft from the cover or case top side.
- If remove the drive shaft from the gear box, then its bearing has to be replaced.

Check drive shaft and gear for wear or damage.

Bearing Replacement

Caution

- Never install used bearings. Once bearing removed, it has to be replaced with new one.

Remove drive shaft bearing from left crankcase using following tools;
Special Service Tool:
Inner type bearing puller SYM-6204002

Install new drive shaft bearing into left crankcase.
Special Service Tool:
Bearing (6204) installer SYM-9110400
Bearing (6301) installer SYM-9610000
Bearing (6203/6004UZ) installer (Ø17) SYM-9620000

Press out the drive shaft from the gear box cover.
Remove oil seal from the gear box cover.
Remove the drive shaft bearing from the gear box cover with the inner type bearing puller.

Caution

- Using the bearing protector as pressing out the driving shaft from the gear box cover.

Special Service Tool: Shaft protector

If the driving shaft is pulled out with its bearing, then remove the bearing with bearing puller and bearing protector.
Special Service Tool:
Multi-functional bearing puller or Outer type bearing puller SYM-6204001

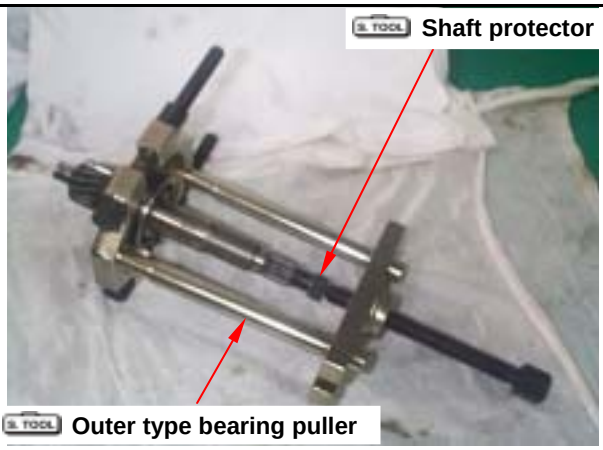

Install a new drive shaft bearing onto gear box cover.
Then, install the drive shaft.
Special Service Tool:
Bearing (6204) installer SYM-9110400
Install the drive shaft.
Special Service Tool:
Drive shaft puller SYM-1130010
Puller set SYM-1130000-L

Install new oil seal with the special service tool.
Special Service Tool:
Oil seal (20x32x6) installer SYM-9120200

Re-assembly of Final Driven Mechanism

HU05U

Apply with grease onto the oil seal lip of final driven shaft.
Install final driven shaft and final driven gear, countershaft, and countershaft gear.

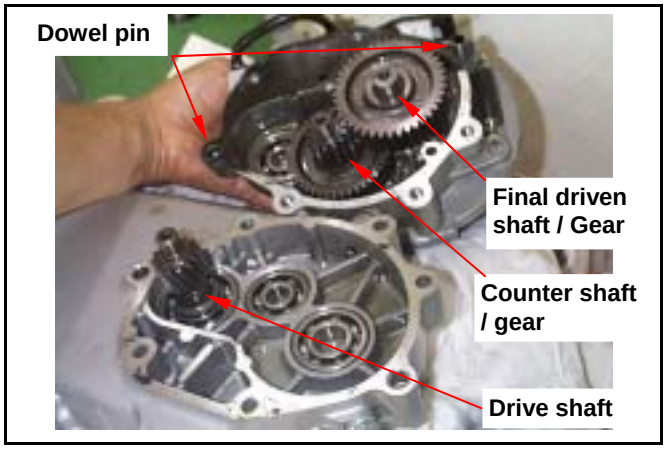

Install the dowel pins (2 pins) and new gasket.
Install the gear box cover and 7 bolts (tighten the bolts).
Torque value: 2.0~2.4kgf-m

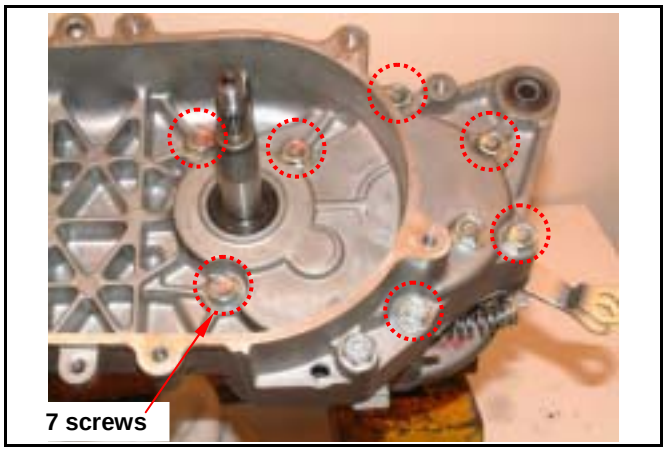

HU10U/W

Apply with grease onto the oil seal lip of final driven shaft.
Install final driven shaft and final driven gear, countershaft, and countershaft gear.

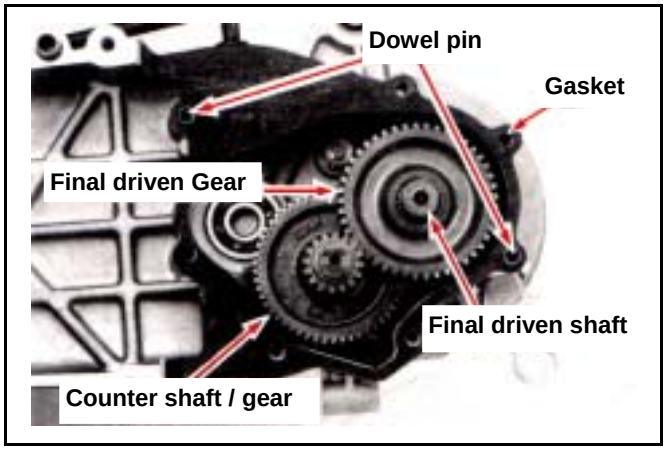

Install the dowel pins (2 pins) and new gasket.
Install the gear box cover and 7 bolts (tighten the bolts).
Torque value: 2.0~2.4kgf-m

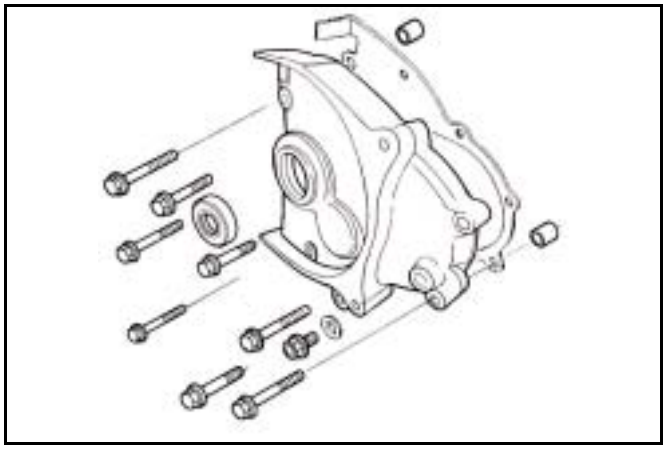

Install the driven pulley / clutch outer / belt / movable drive face / drive face.

Install the left crankshaft cover and kick starter.
Install the rear wheel.
Add gear oil.
※Recommended usage: SYM HYPOID GEAR OIL (SAE 85W-140)

Mechanism Illustrations ····· 10-1	Starting Clutch ····· 10-5
Operational Precautions ····· 10-2	Right Crankcase Cover Installation ···· 10-7
Alternator Removal ····· 10-3	Alternator Coil Set Installation ····· 10-8
Right Crankcase Cover Removal ····· 10-4	Flywheel Installation ····· 10-8

Mechanism Illustrations

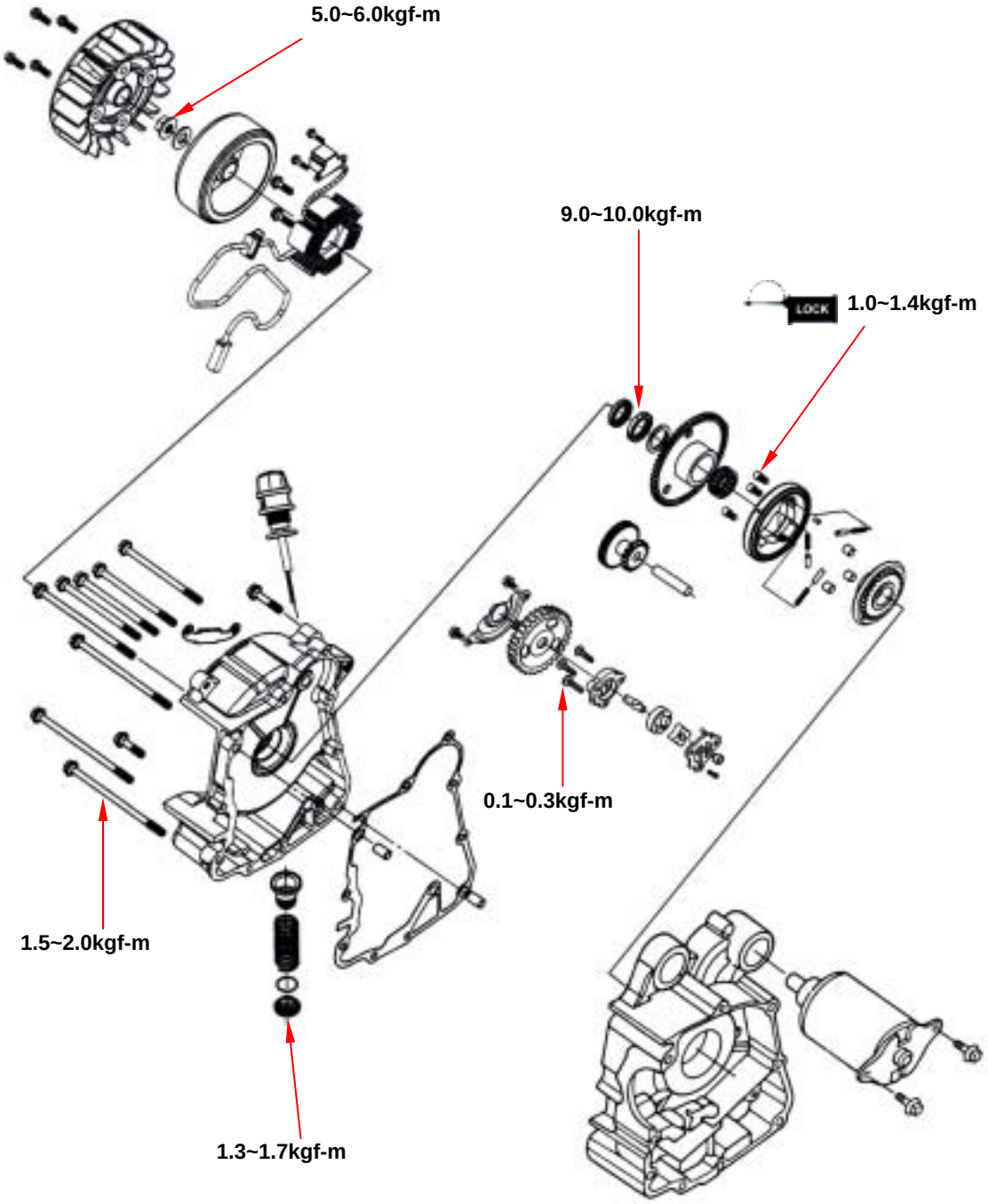

Operational Precautions

General information

- Refer to chapter 5: Engine removal and installation
- Refer to chapter 1 : The troubleshooting and inspection of alternator
- Refer to chapter 16: The service procedures and precaution items of starter motor

Specification

Unit: mm

Item	Service Limit
ID of starting driven gear	32.060
OD of clutch cover	27.940

Torque value:

Flywheel nut	5.0~6.0kgf-m
Pipe bolt 8mm	1.5~2.0kgf-m
Oil screen cover	1.3~1.7kgf-m
Starting clutch hex mounting nut	9.0~10.0kgf-m with oil on the thread
Starting clutch hex socket bolt	1.0~1.4kgf-m with adhesive

Special service tools

Flywheel puller	SYM-3110A01
Universal fixture	SYM-2210100
Anti-loosen mounting nut socket of starter gear	SYM-A12590201

Alternator Removal

Drain out the engine oil.
Remove the right side cover.
Remove the exhaust pipe (2 bolts, 2 nuts).

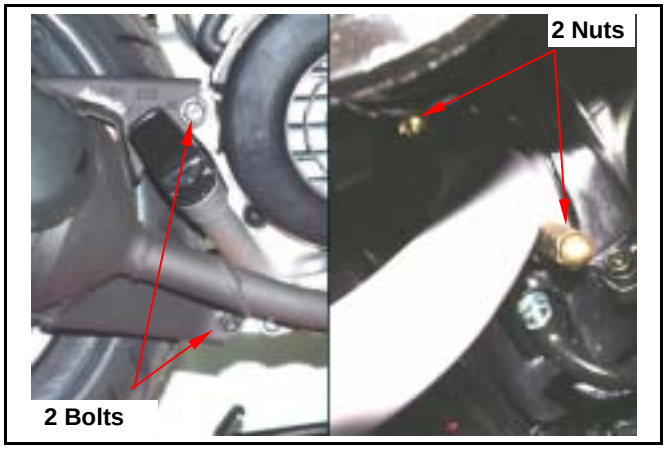

Remove the fan shroud (2 screws, 2 bolts).

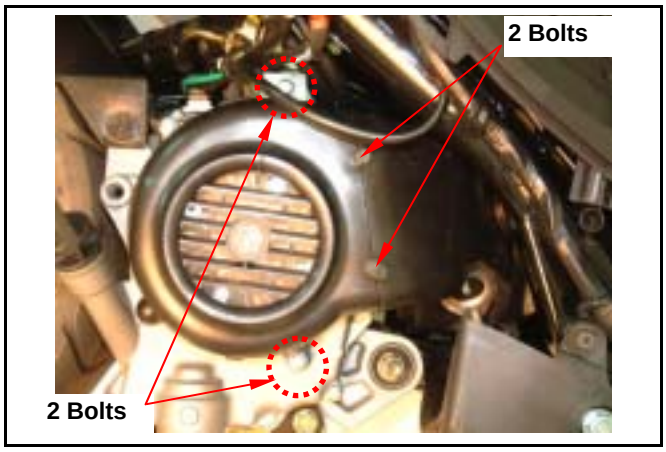

Remove the cooling fan (4 bolts).

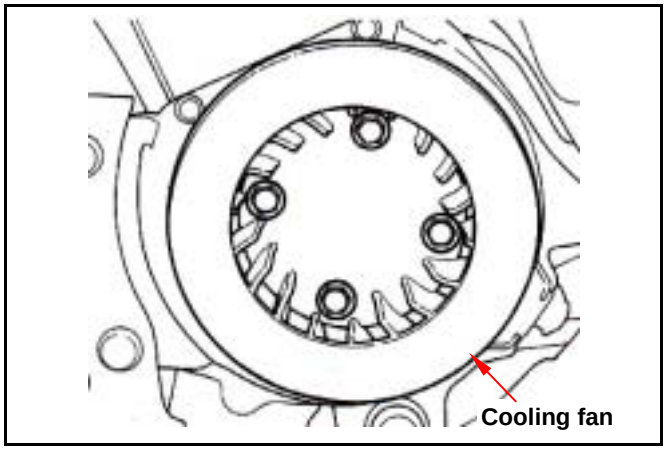

Hold the flywheel with the universal fixture.
Remove the 10mm nut on the flywheel.
Special Service Tools:
Universal Fixture SYM-2210100

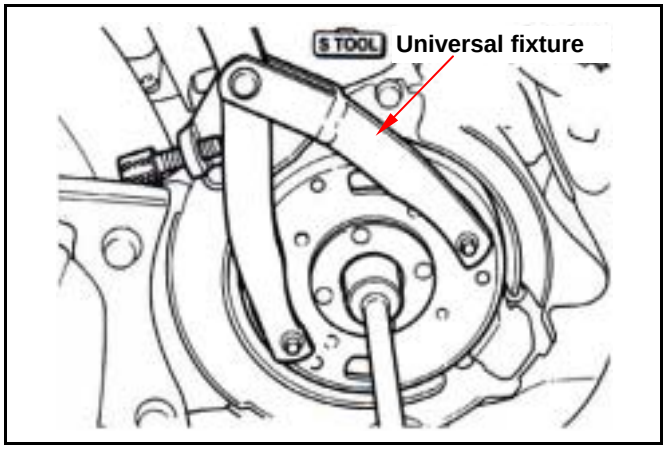

Remove the flywheel with the flywheel puller.
Special service tools:
Flywheel puller SYM-3110000

Caution

- Install a shaft protector on the right end of crankshaft to avoid damaging the crankshaft before installing the flywheel puller.

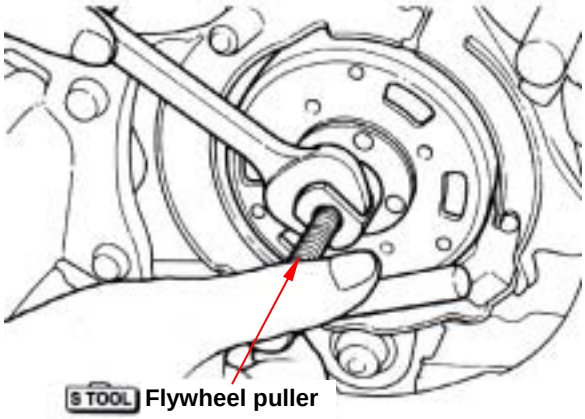

Remove the connectors of the alternator and pulse generator.

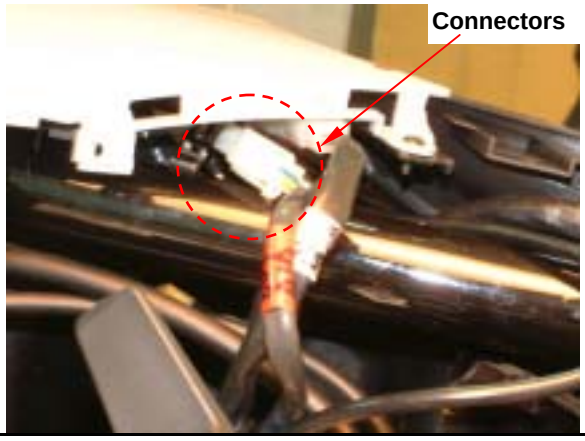

Remove the 6 bolts for the pulse generator, the alternator coil and cable guide. Then, remove the alternator assembly.

Caution

- Do not damage the alternator coil.

Right Crankcase Cover Removal

Remove the right crankcase cover (6 bolts)
Remove dowel pin and gasket.
Remove the gasket or foreign materials on the connection surfaces of both the cover and crankcase.

Caution

- Do not damage the connection surfaces.

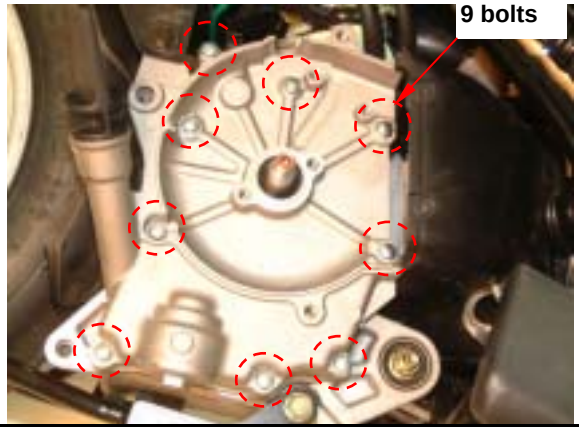

Starting Clutch

Starting Clutch Removal

Hold the starting driven gear with the universal fixture.
Remove the 22mm anti-loosen mounting nut and gasket.

Special service tools:
Nut puller of starter gear SYM-9020100
Universal fixture SYM-2210100

Caution

- The mounting nut is left-turn thread.

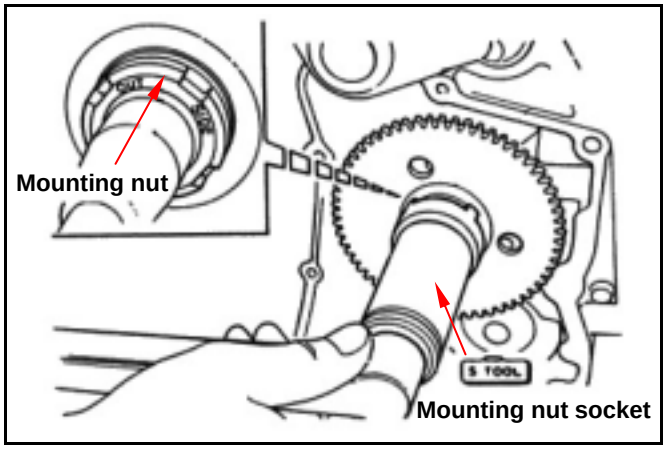

Remove the starting driven gear.

Remove starting clutch, starting idle-gear, and shaft.

Starting Clutch Inspection

Install the starting clutch onto the starting driven gear.
Hold the starting clutch and turn the starting driven gear.
The starting driven gear should can be turned in the motion of C.W. and can not be turned in C.C.W.

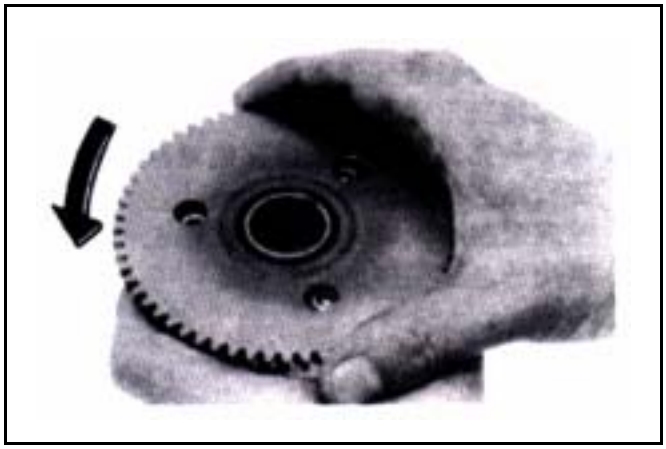

Check the starting driven gear for wear or damage.
Measure the ID of the starting driven gear.
Service Limit:
ID: 32.06 mm or less

Check the starting idle gear and shaft for wear or damage.
Measure the ID of the starting idle gear.
Service Limit:
ID: 10.05 mm or less

Measure the OD of the starting idle gear.
Service Limit:
OD: 9.94 mm or less

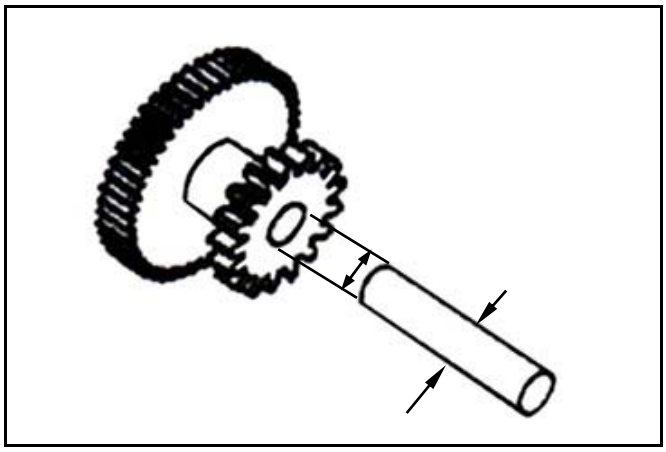

Disassembly

Remove the hex blots (3 bolts) inside the starting clutch.
Separate the clutch body and the clutch cover.
Remove the rollers, plugs, and springs on the one way clutch.
Check each rollers and plugs for wear or damage.
Install rollers, plugs and springs.

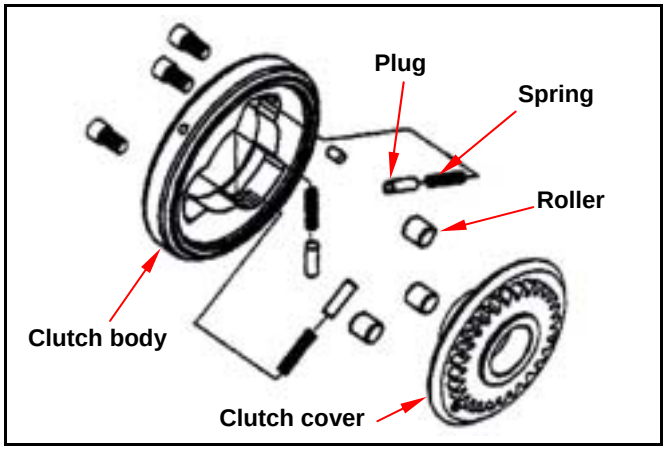

Measure the OD of the starting clutch cover.
Service Limit:
OD: 27.94 mm or less

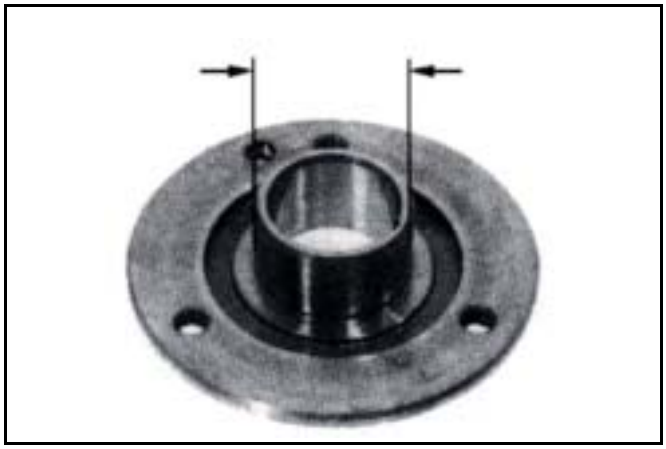

Installation

Install the components in the reverse procedures of removal.

Caution

- Add adhesive onto the thread of hex socket bolt.

Torque value: 1.0~1.4kgf-m

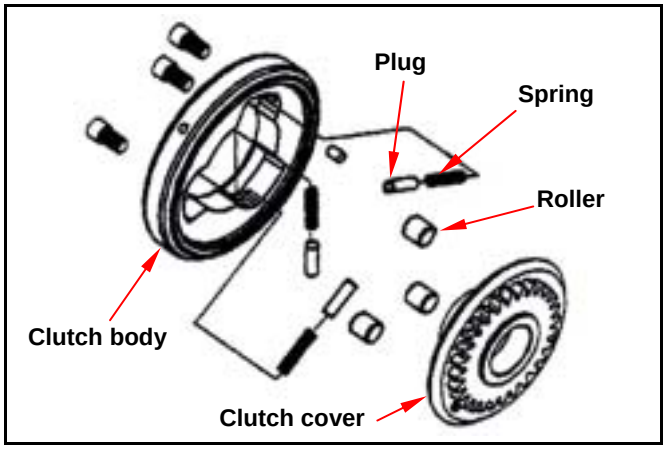

Starting clutch Installation

Install idle gear shaft and idle gear.
Install starting clutch and the starting clutch.

Hold the starting driven gear with the universal fixture.
Tighten the 22mm anti-loosen mounting nut and gasket.

Caution

- Add engine oil onto the thread of mounting nut.

Special service tools:
Anti-loosen mounting nut socket of starter gear **SYM-A12590201**
Universal fixture **SYM-2210100**
Torque value: 9.0~10.0kgf-m

Right Crankcase Cover Installation

Install dowel pin and new gasket on the crankcase.
Replace the right crankshaft oil seal of the crankcase and apply some oil onto the oil seal lip.
Install right crankcase cover onto the right crankcase (9 bolts)
Torque value: 1.5~2.0kgf-m

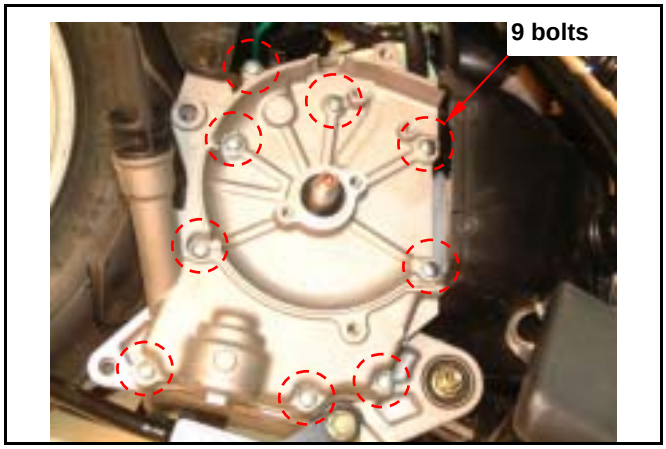

Alternator Coil Set Installation

Install the coil set onto right crankcase cover. (2 bolts)
Install pulse generator (2 bolts)
Tighten the cable guide (2 bolts)
Torque: 1.5~2.0kgf-m
Tie the wire harness hose onto the indent of crankcase

Caution

- Make sure that the wire harness is placed under the pulse generator.

Install both the AC generator and the pulse generator connectors.

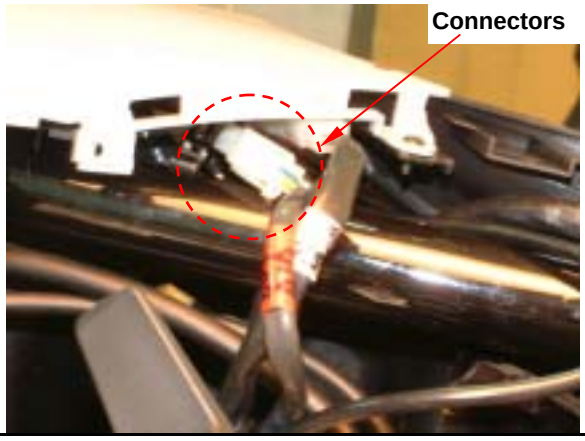

Flywheel Installation

Make sure that there is no magnetic powder. If so, clean up it.
Align insert on crankshaft with the flywheel groove, and then install the flywheel
Hold the flywheel with flywheel holder, and tighten its nut.
Torque value: 5.0~6.0kgf-m
Special service tool:
Universal fixture SYM-2210100

Install the cooling fan (4 bolts).
Install the cooling fan shroud (2 screws, 2 bolts)
Install the exhaust pipe (2 bolts, 2 nuts)
Install the right side cover. (1 screw)
Add some engine oil according the specified quantity.

Mechanism Illustrations ·····11-1	Disassembly of Crankcase····· 11-3
Operational Precautions·····11-2	Crankshaft Inspection ····· 11-5
Trouble Diagnosis·····11-2	Assembly of Crankcase····· 11-6

Mechanism Illustrations

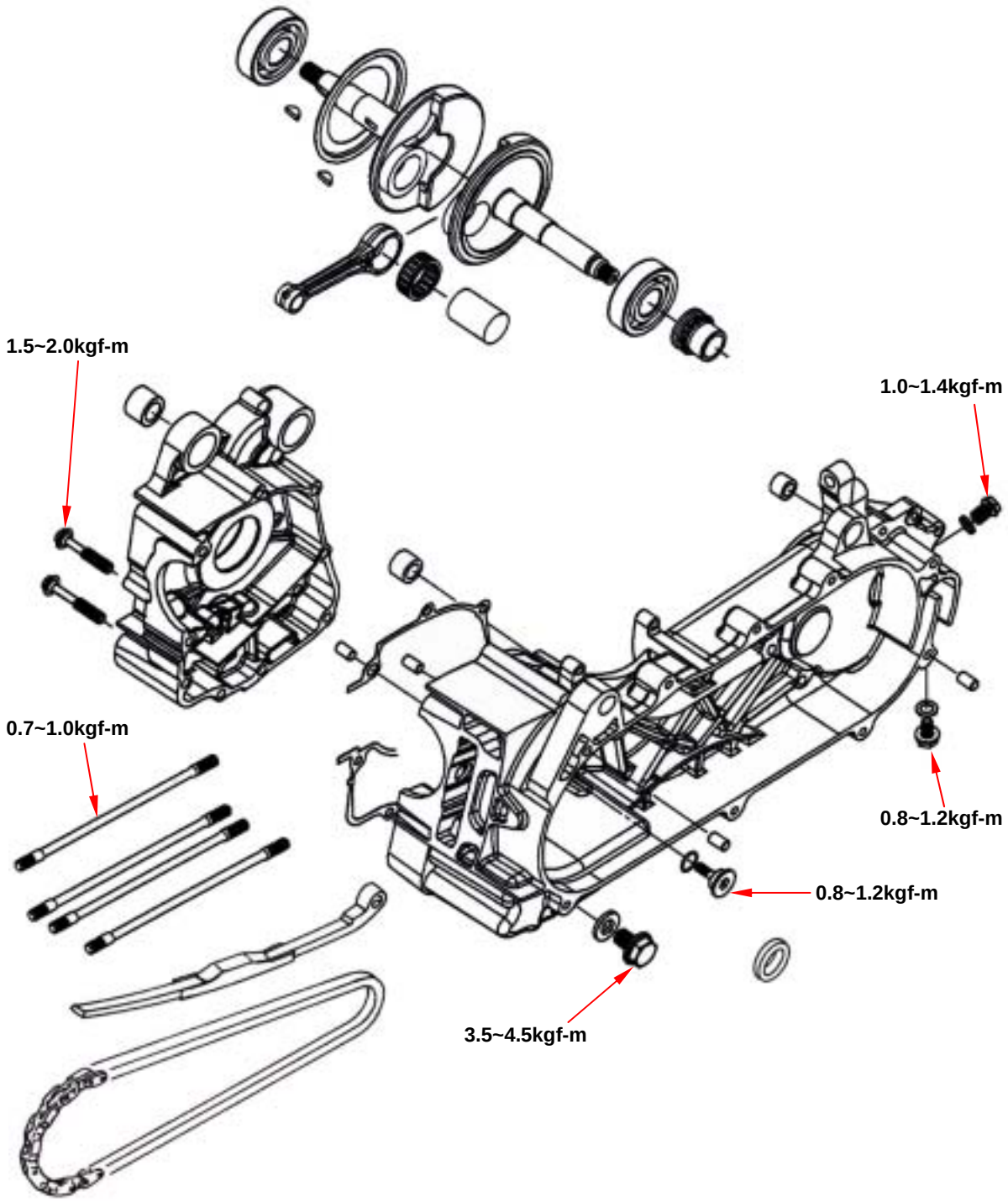

Operational Precautions

General information

- This Section contains descriptions concerning disassembly of the crankcase so that the crankshaft can be serviced.

- Complete following operations before disassembling crankcase.

Engine	Chapter 5
Cylinder head	Chapter 6
Cylinder and piston	Chapter 7
V-belt Drive pulley	Chapter 8
Alternator/Foot Starting Clutch	Chapter 10
Start motor	Chapter 16

- If the crankshaft bearing or timing sprocket need be replaced, then the crankshaft set have to replaced.

Specification

Unit: mm

Item	Standard	Limit
Left, right clearance of the big end of the connecting rod	0.100~0.300	0.550
Right angle clearance of the big end of the connecting rod	0.000~0.008	0.050
Run-out	—	0.100

Torque value

Bolts for crankcase	1.5 ~ 2.0kgf-m
Bolts for cylinder/cylinder head	0.7 ~ 1.0kgf-m
Engine oil draining plug	3.5 ~ 4.5kgf-m
Bolts for cam chain tensioner	0.8 ~ 1.2kgf-m

Special Service Tools

Oil seal (25X37X6) pressing tools SYM-9121600

Trouble Diagnosis

Engine noise

- Loose crankshaft bearing
- Loose crankshaft pin bearing
- Wear piston pin or piston pin hole

Disassembly of Crankcase

Remove the cam chain tensioner (hex socket bolt) from the left side of crankcase.
Remove the connection bolts (2 bolts) of the right-side crankcase.

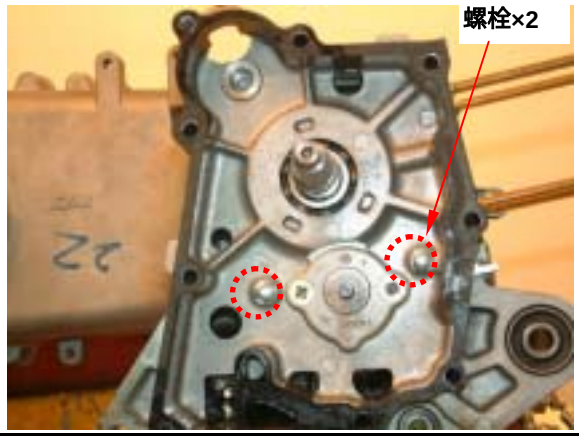

Remove the right-side crankcase.

Slightly shake the crankshaft and then remove it and the chain.

Remove the gasket and the 2 dowel pins.
Scrape gasket residues off the crankcase contact surface.

Caution

- Do not damage contact surface of the crankcase.
- Soap the gasket residues into solvent and the residues will be removed easily.

Remove the oil seal of left-side crankcase.

Crankshaft Inspection

Measure left and right clearance of connecting rod big end.
Service limit: Replace when it is more than 0.55 mm.

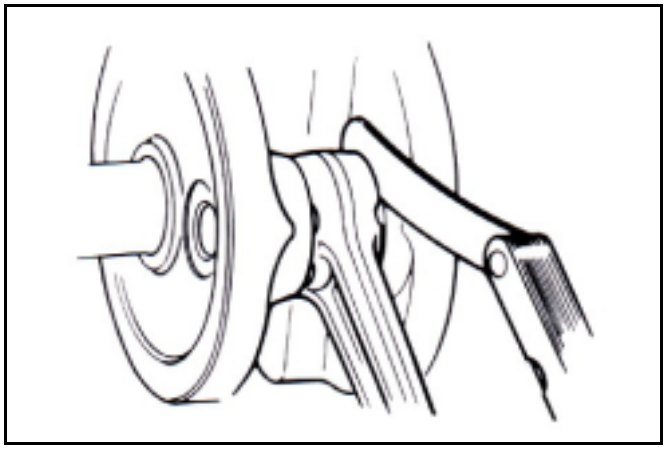

Measure the radical clearance of the big end at the vertical directions.
Service limit: Replace when it is more than 0.05 mm.

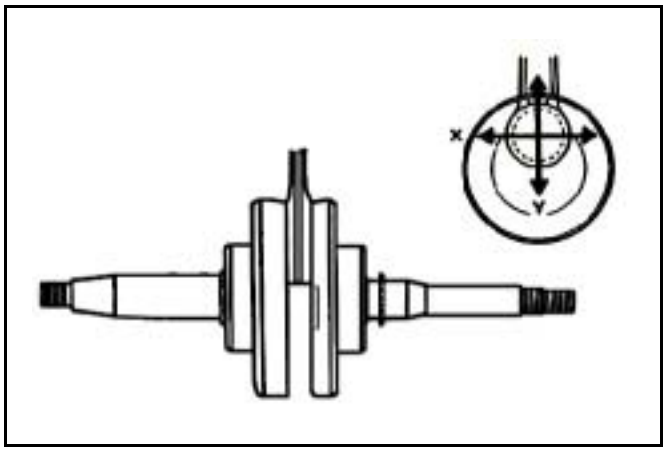

Place the crankshaft onto a V-block and measure run-out of the crankshaft with dial gauge.
Service limit: Replace when it is more than 0.10 mm.

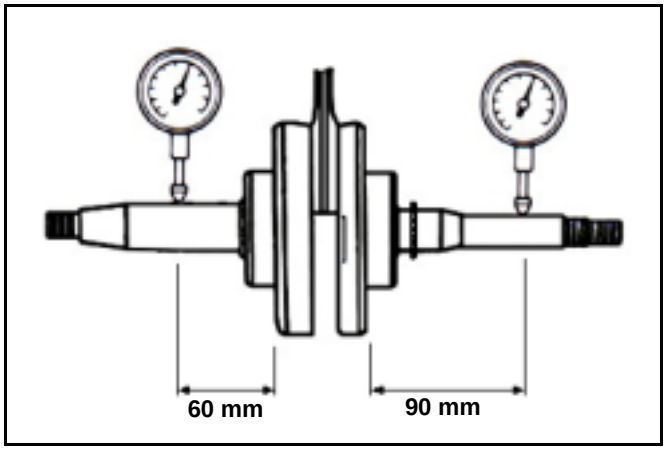

Bearing Inspection

Rotate the bearing with fingers and make sure the bearing can be rotated smoothly and quietly.
Check if the inner ring is connected onto the crankshaft tightly.
Replace crankshaft as a set when noise or looseness is detected.

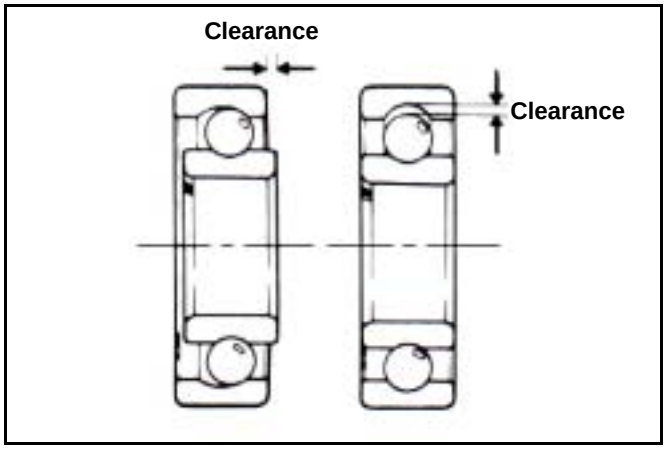

Assembly of Crankcase

Install cam chain into the chain hole of the left crankcase, and then split out the cam chain.

Caution

- Do not damage the cam chain as installing the crankshaft.

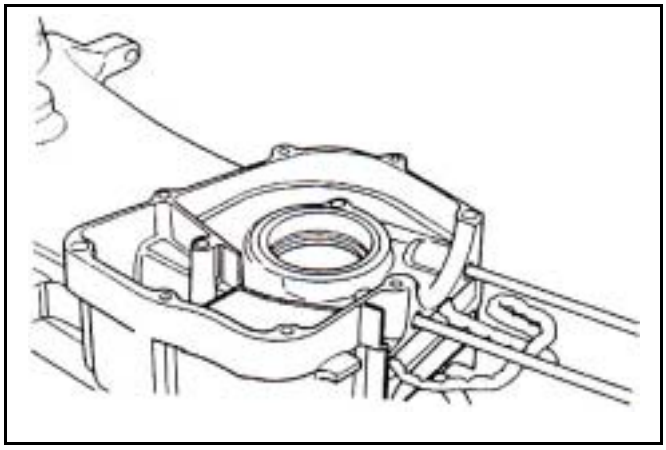

Install crankshaft into the left crankcase and then install two and new crankcase gasket.

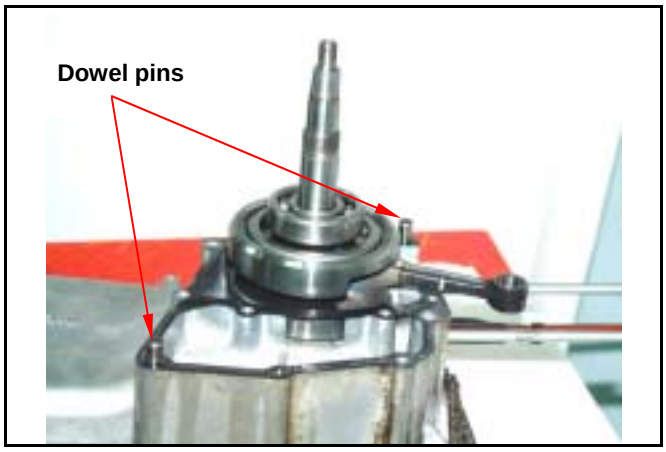

Install the right crankcase and tighten the crankcase bolts (2 bolts).
Torque value: 1.5~2.0kgf-m

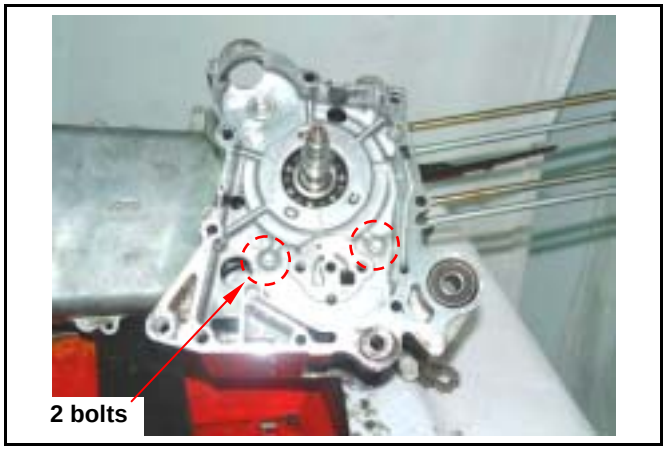

Install the cam chain tensioner.
Install a new O-ring onto the mounting bolt of the chain tensioner.
Apply some oil on the O-ring and tighten the bolt.
Torque value: 0.8~1.2kgf-m

Caution

- The O-ring must be installed into the bolt's groove.

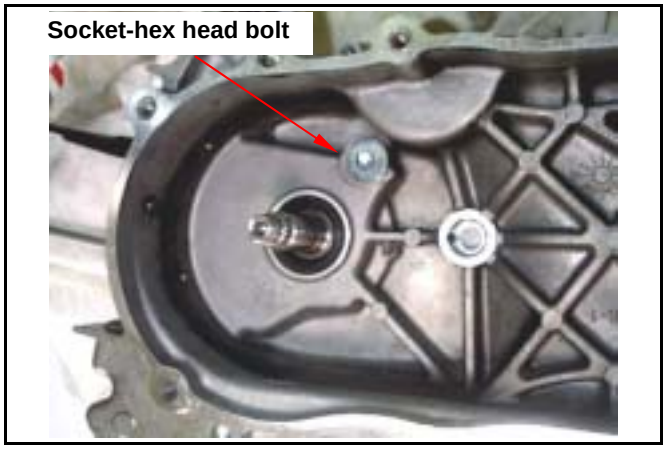

Apply with some grease onto the oil seal lip and then install it onto the left crankcase.

Press-fit the oil seal to specified position with the oil seal installer (25x37x6)
Special service tools:
Oil seal installer (25x37x6) SYM-9120200

Notes:

Mechanism Illustrations ····· 12-1
Maintenance Information ····· 12-2
Front Cover ····· 12-3
Handle Cover ····· 12-4
Front Fender ····· 12-6
Front under Spoiler ····· 12-7
Front Inner Cover ····· 12-8
Luggage Box ····· 12-9
Rear Carrier ····· 12-10
Battery Cover ····· 12-10
Side Cover ····· 12-11
Rear Center Cover ····· 12-11
Center Cover ····· 12-12
Body Cover ····· 12-13
Floor Panel ····· 12-14
Rear Fender ····· 12-15
Rear Mudguard ····· 12-16

Mechanism Illustrations

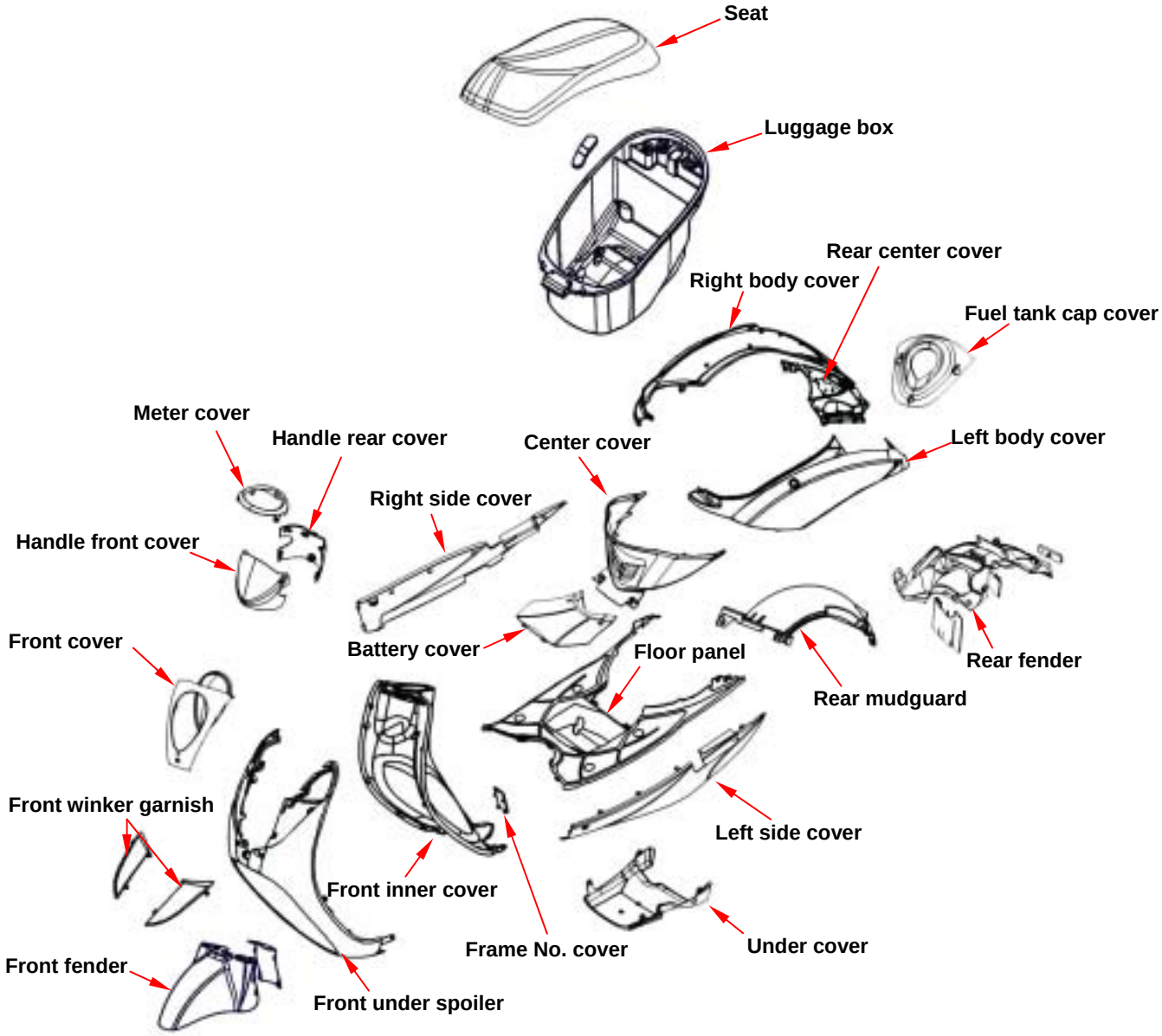

Maintenance Information

Body covers disassemble sequence:

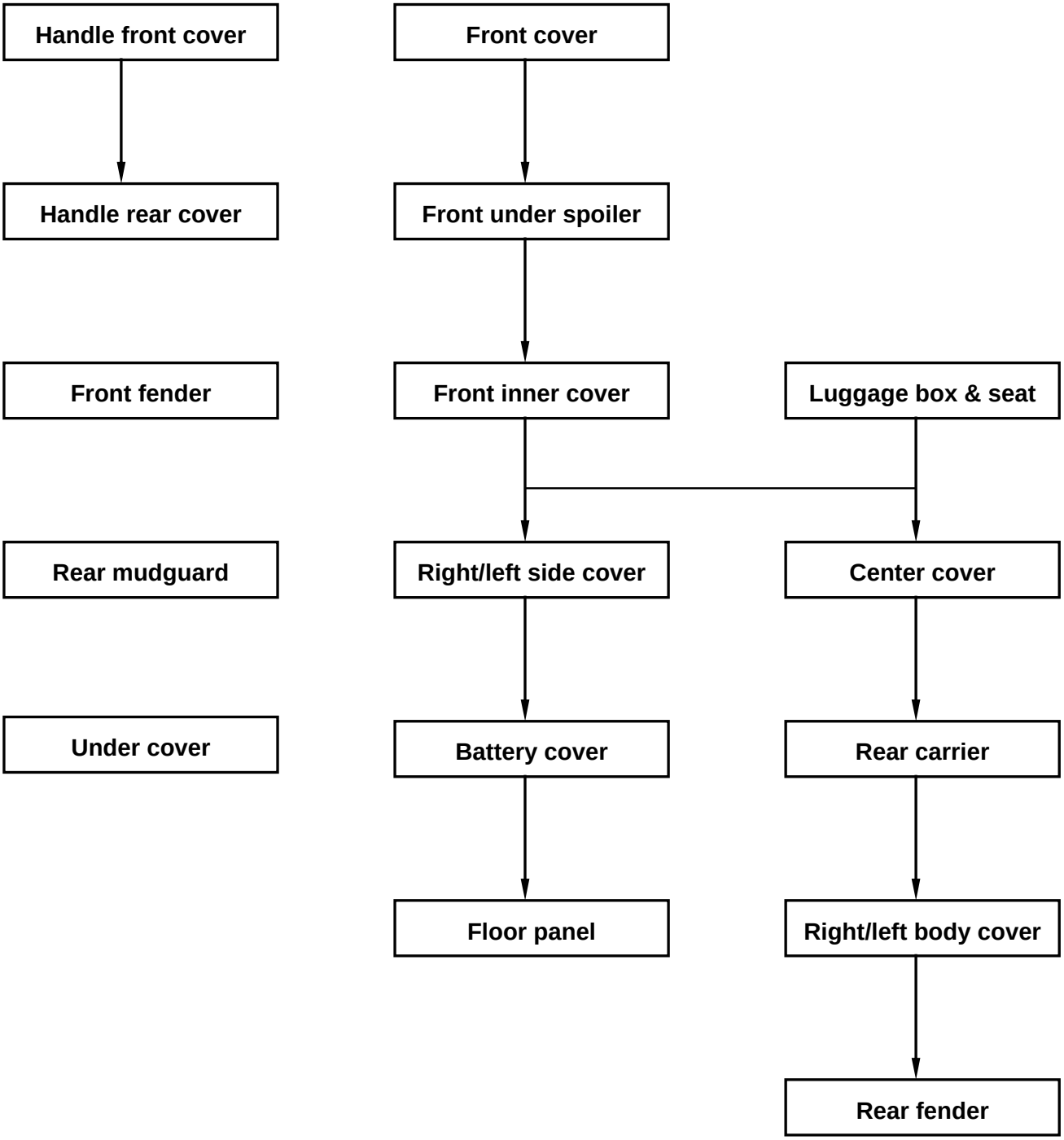

- Be careful not to damage various covers in disassembly or re-assembly operation.
- Never injure hooks molded on the body covers in disassembly or re-assembly operation.
- Align the buckles on the guards with slot on the covers.
- Make sure that each hook is properly installed during the assembly.
- Never compact forcefully or hammer the guard and the covers during assembly.

Front Cover

Removal

Remove the mounting screws (2 screws) of front cover from the front inner cover side.

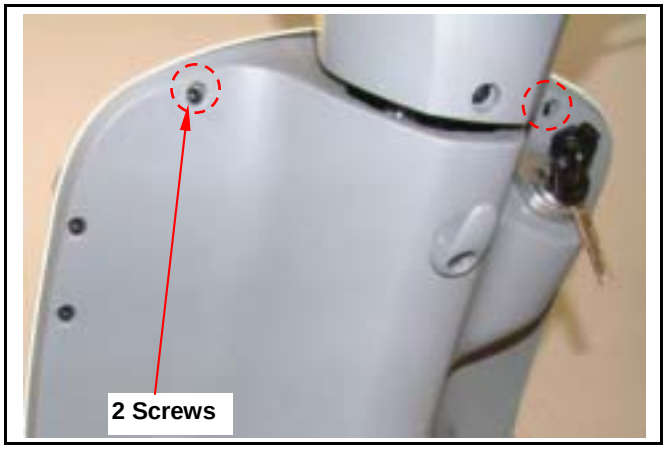

Remove the front mounting screw (1 screw) of the front cover.
Push the front cover upward and then pull it forward so that the lower mounting groove of front cover can be separated from the front under spoiler.

Disconnect the headlight and position light wire coupler.

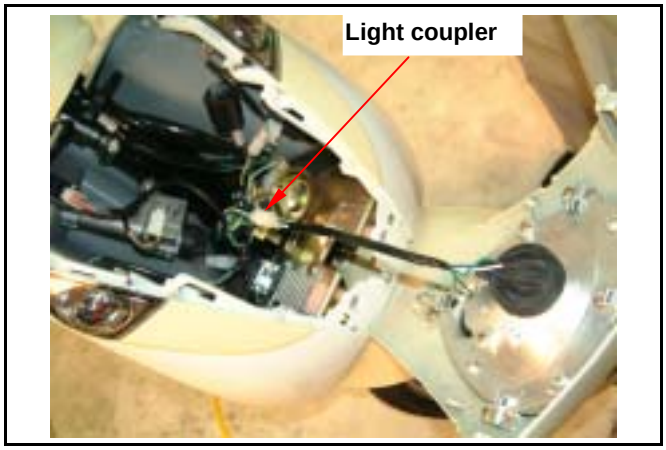

Remove the front cover.

Installation

Install according to the reverse procedure of removal.

Handle Cover

Removal

Loosen the handle front cover mounting screws (2 screws) of the handle from the handle rear cover. Push the two side screws, then hooks of handle two sides so that the handle covers can be separated.

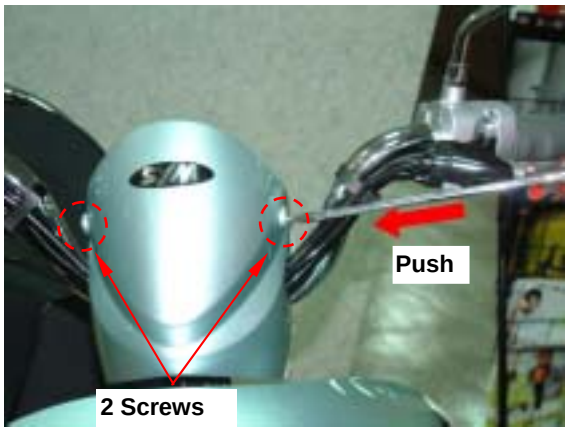

Remove two side screws.

Remove handle front cover.

Remove the speedometer cable.

Disconnect the instrument panel and switch wiring couplers.

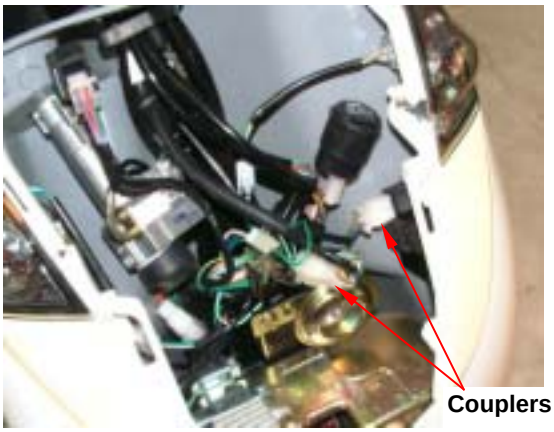

Remove the handle rear cover rear side screw (1 screw).

Remove meter mounting bolts (2 bolts).
Remove handle rear cover and meter.

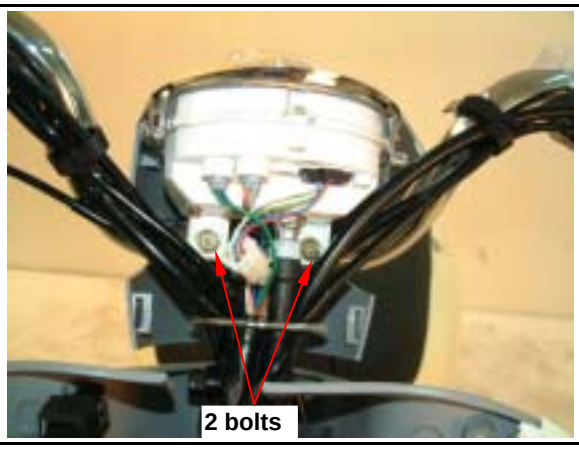

Installation
Install according to the reverse procedure of removal.

Front Fender

Remove speedometer cable (1 screw).
Remove front brake cable (drum brake type).
Remove front brake caliper (disk brake type).

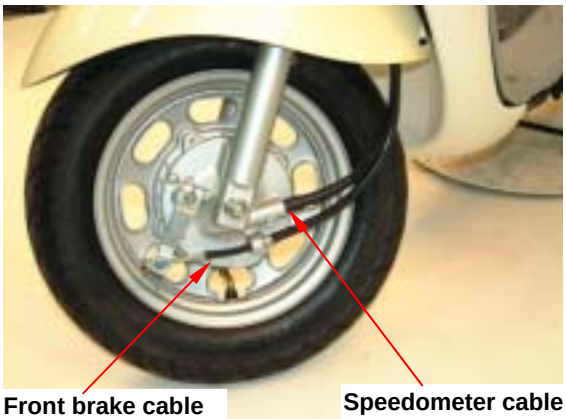

Remove the front wheel. (1 nut)

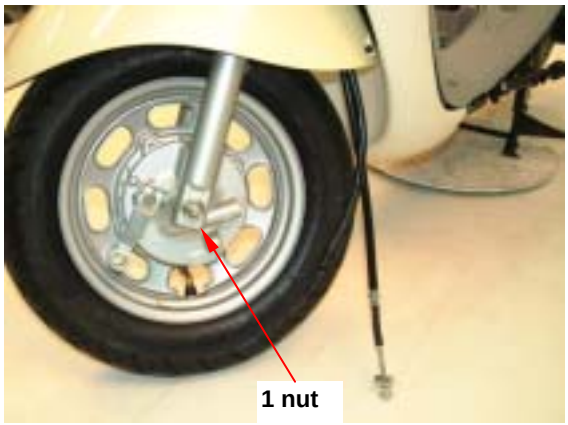

Remove the inner-up bolts (2 bolts) from the front fender.

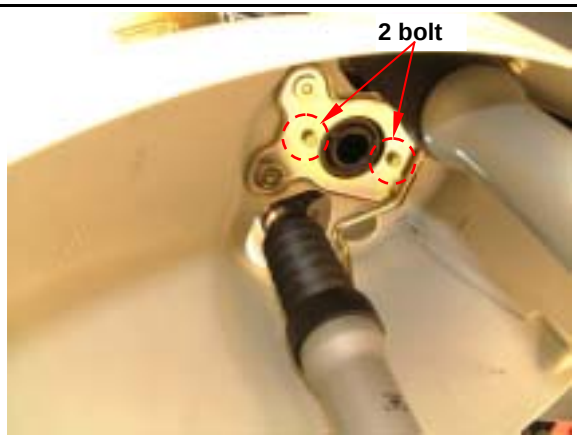

Remove front fender.

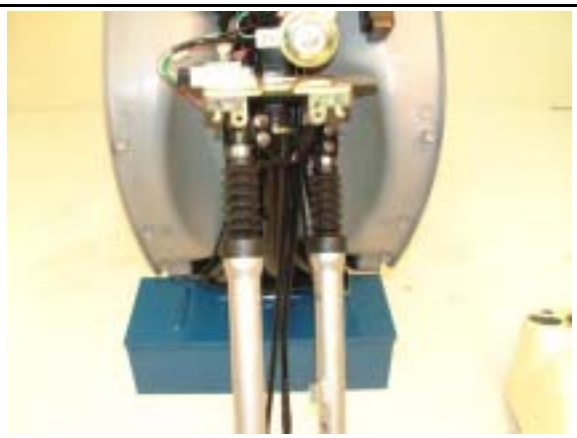

Installation

Install according to the reverse procedure of removal.

Front under Spoiler

Remove front cover.
Remove the 10 screws on left & right both sides of rear-end from the inner cover.

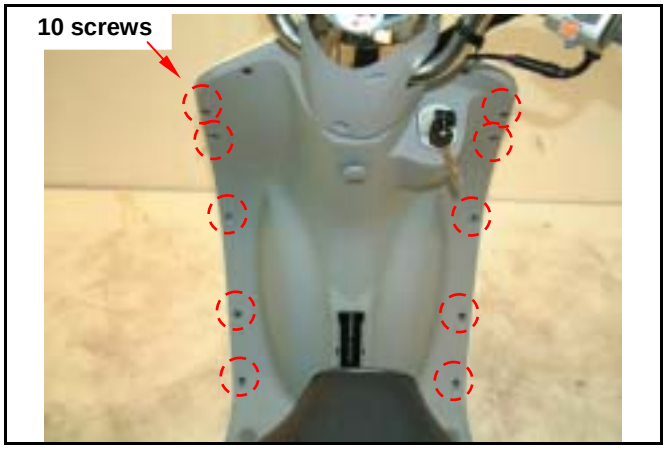

Remove the front-upper screws, bolts. (2 screws & 2 bolts)

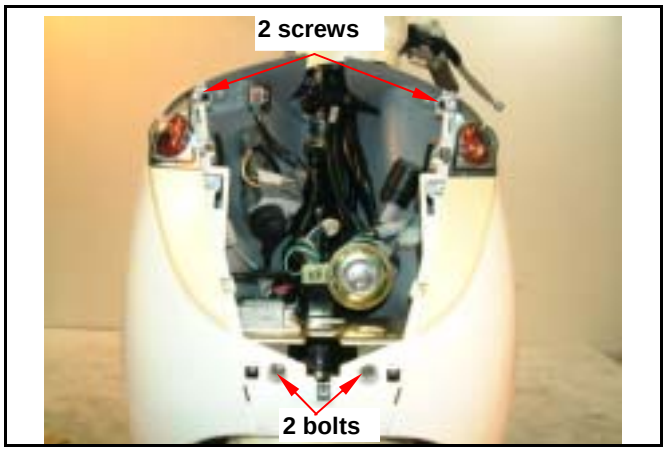

Disconnect the winker light couplers.

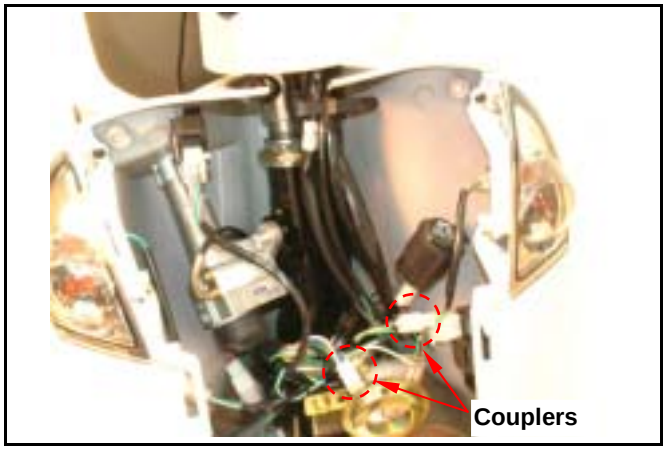

Remove the front under spoiler.

Installation

Install according to the reverse procedure of removal.

Front Inner Cover

Removal

Remove the front cover and the front under spoiler.
Remove the main switch cap. (1 screw)

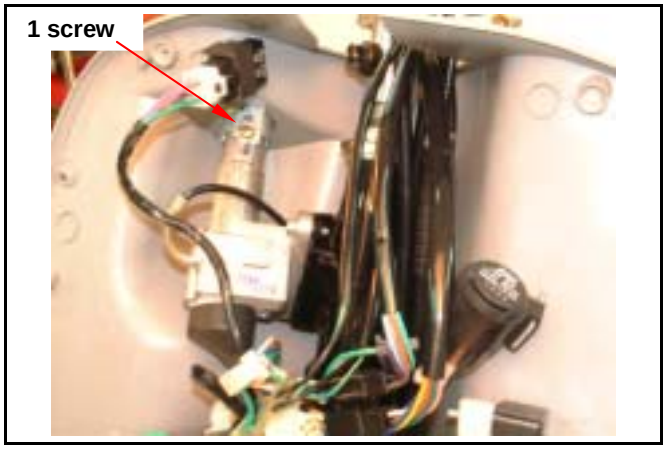

Remove the rear mounting screw (1 screw) of the inner cover.

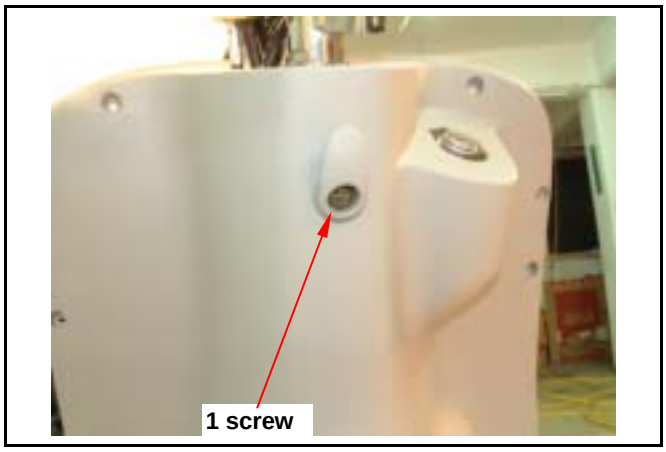

Remove winker relay and meter control unit.

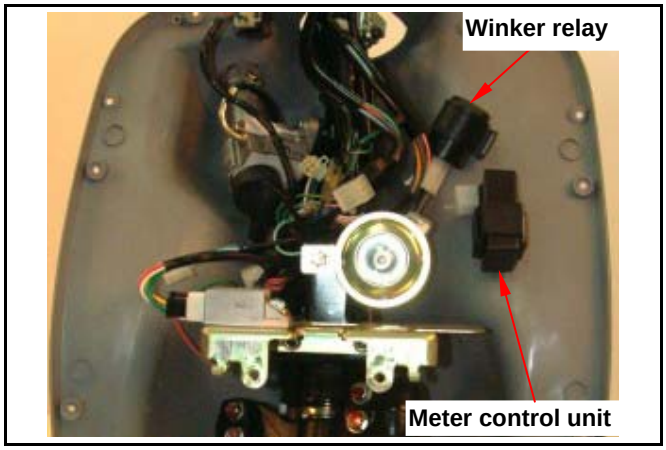

Pry out all wire clamps and then take out the front inner cover.

Installation

Install the front inner cover according to the reverse procedure of removal.

Luggage Box

Remove the mounting bolts (4 bolts) from the luggage box.

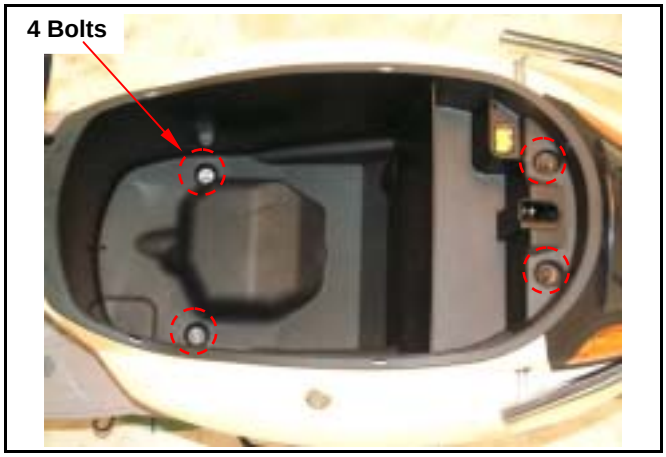

Disconnect the engine start control switch coupler.

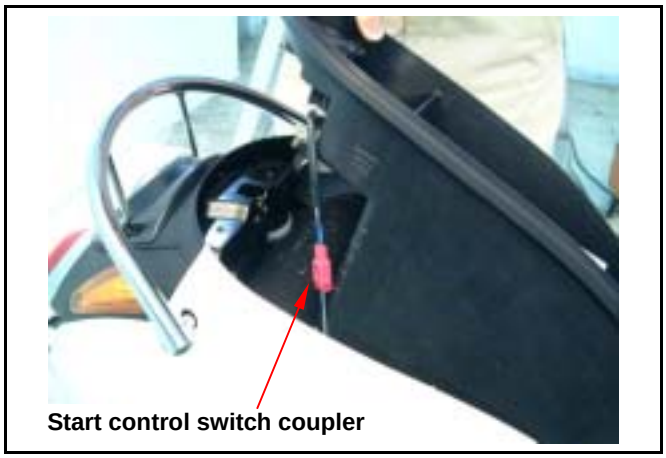

Remove luggage box.

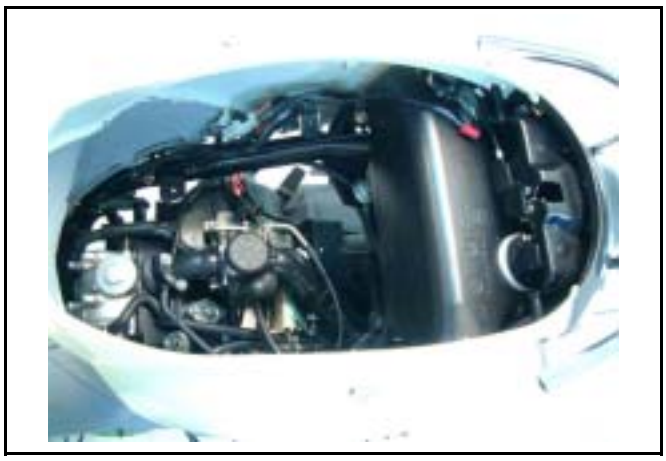

Installation

Install according to the reverse procedure of removal.

Rear Carrier

Remove the rear carrier mounting bolts and nuts (2 bolts & 2 nuts)

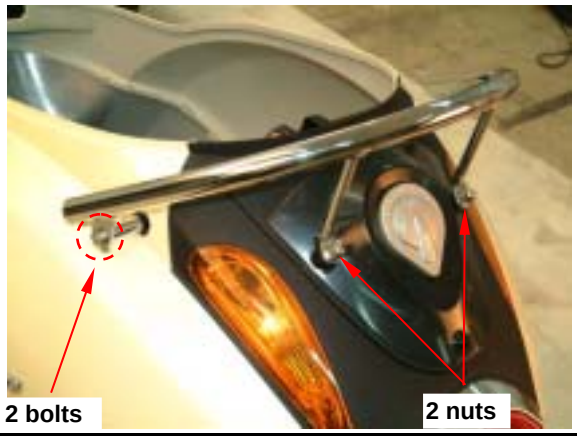

Remove rear carrier.

Installation

Install according to the reverse procedure of removal.

Battery Cover

Remove batter cover screws (2 screws).

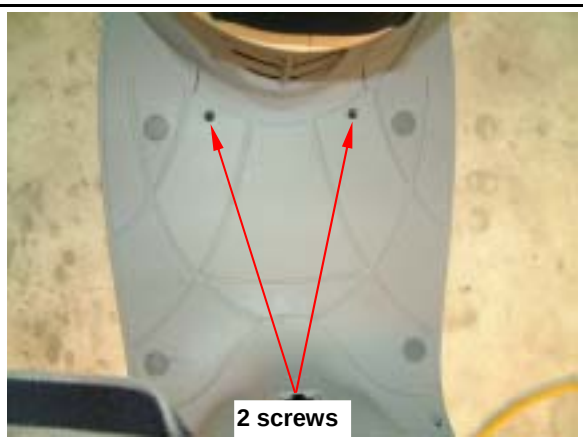

Remove batter cover.

Installation

Install according to the reverse procedure of removal.

Side Cover

Removal

Remove the 2 screws on both left & right sides covers.

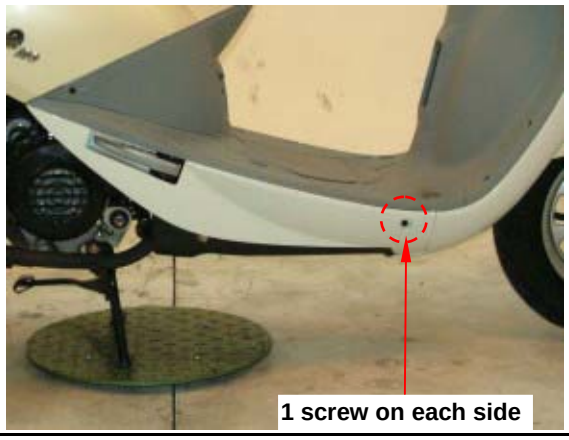

Remove right and left side covers.

Installation

Install according to the reverse procedure of removal.

Rear Center Cover

Remove the rear carrier mounting bolts and nuts (2 bolts & 2 nuts)

Remove rear center cover mounting screw (1 screw).

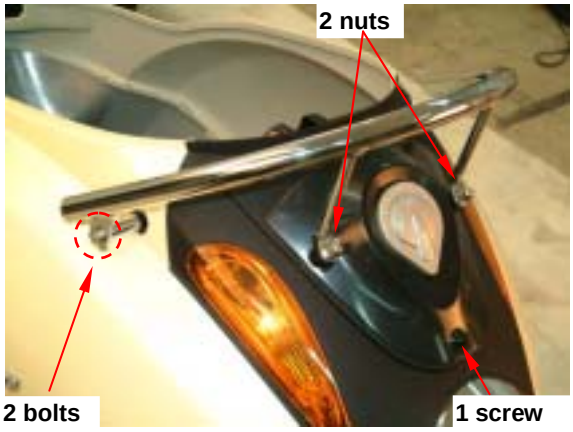

Remove rear center cover.

Installation

Install according to the reverse procedure of removal.

Center Cover

Removal

Remove center cover upper screw. (1 screw)

Remove center cover right and left screws. (2 screws)

Remove center cover.

Installation

Install according to the reverse procedure of removal.

Body Cover

Removal

Remove the right and left side covers (2 screws).
Remove the luggage box (4 bolts).
Remove the rear carrier (2 bolts & 2 nuts).
Remove the body cover two side screws. (1 screw on each side)

Remove the body cover rear side screws. (1 screw on each side)

Remove seat lock cable.

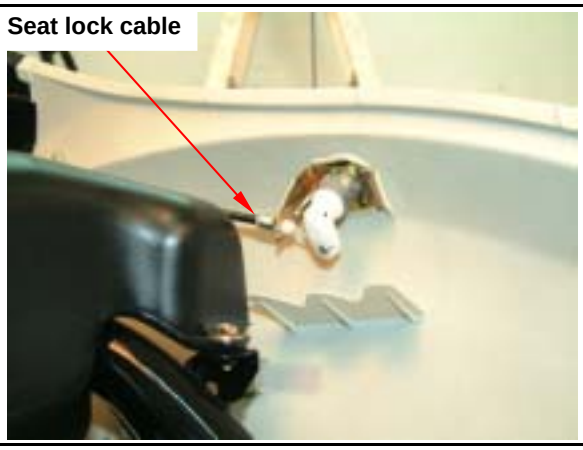

Remove body cover.

Installation

Install according to the reverse procedure of removal.

Floor Panel

Removal

Remove the center cover, side covers, luggage box and body cover as well as body cover.
Remove the 4 floor panel plugs.
There are 4 floor panel mounting bolts.

Remove battery cover, and then remove battery.

Caution

- At first, remove the negative “-“ cable
- Then, remove the positive “+” cable
- Remove the battery

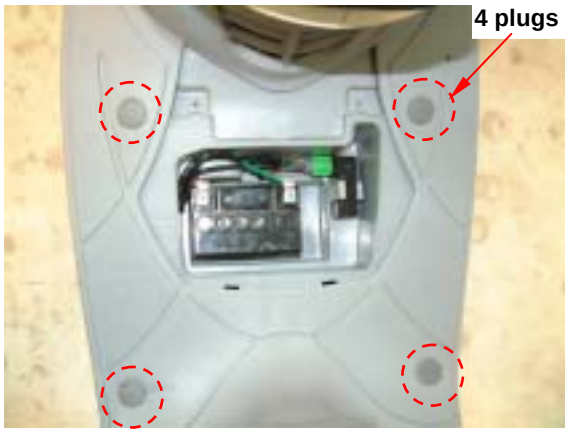

Remove the floor panel mounting bolts (4 bolts).

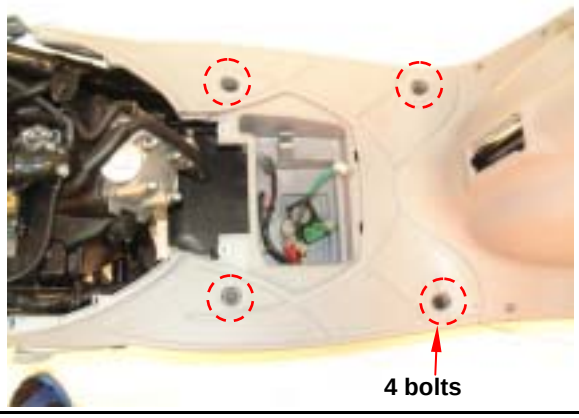

Remove floor panel.

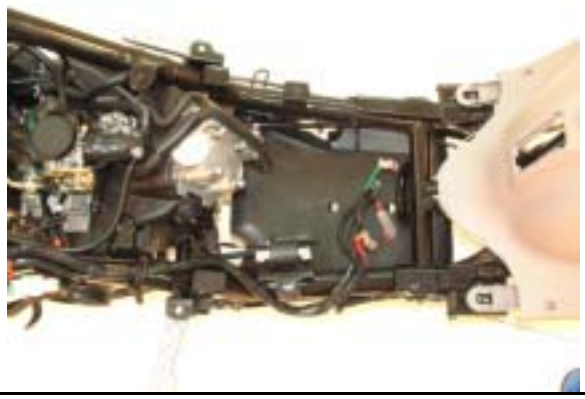

Installation

Install according to the reverse procedure of removal.

Rear Fender

Remove the rear fender rear bolts (2 bolts).

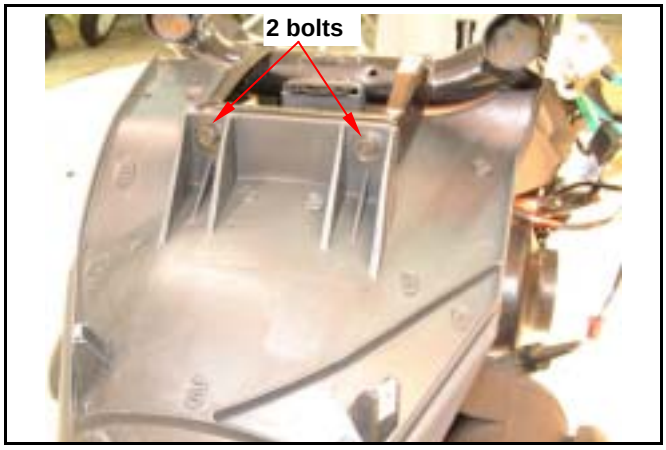

Remove the 2 bolts on the two sides. (1 bolts on each side).

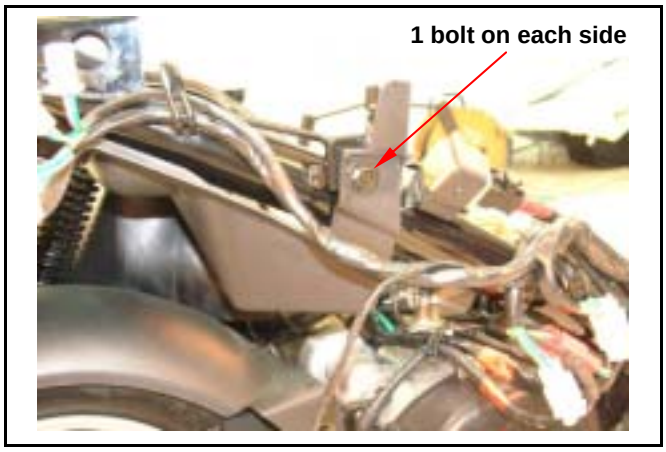

Remove rear fender.

Installation

Install according to the reverse procedure of removal.

Rear Mudguard

Remove the rear mudguard right side bolt (1 bolt). Loosen air cleaner mounting bolts, and then remove the rear mudguard left side bolts (2 bolts).

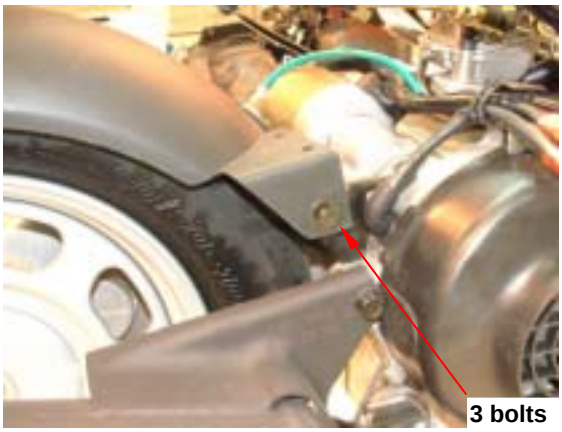

Remove the rear mudguard.

Installation

Install according to the reverse procedure of removal.

Mechanism Diagram-Front Disc Brake System ····· 13-1
Mechanism Diagram-Front Drum Brake System ····· 13-2
Mechanism Diagram-Rear Drum Brake System ····· 13-3
Operational Precautions ····· 13-4
Trouble Diagnosis ····· 13-5
Hydraulic Brake System Inspection ·· 13-6
Brake Fluid Replacement / Air-Bleed · 13-7
Brake Caliper ····· 13-8
Brake Disc ····· 13-9
Brake Master Cylinder ····· 13-9
Drum Brake System ····· 13-12
Brake Lining ····· 13-12
Brake Panel ····· 13-13

Mechanism Diagram-Front Disc Brake System

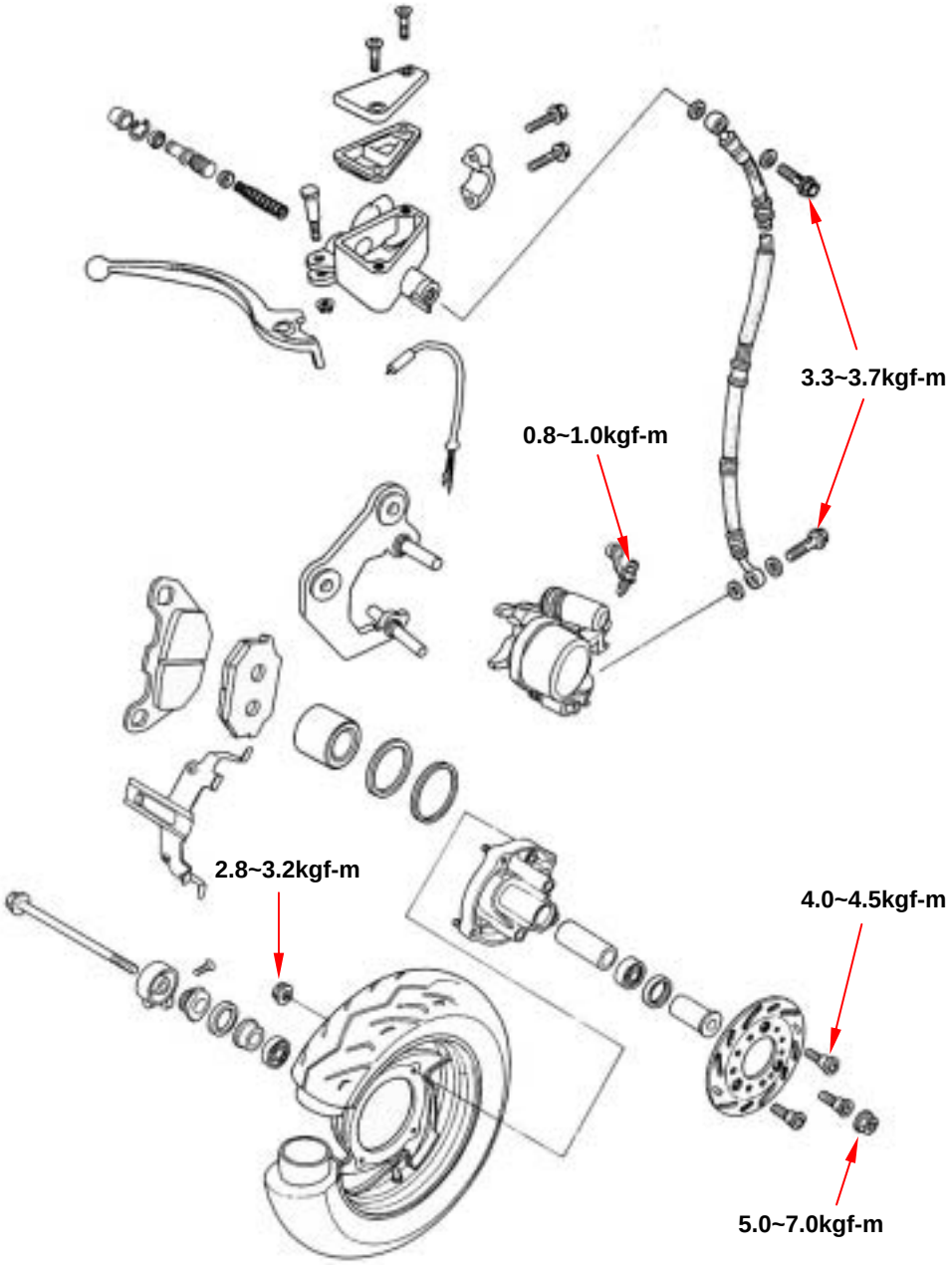

Mechanism Diagram-Front Drum Brake System

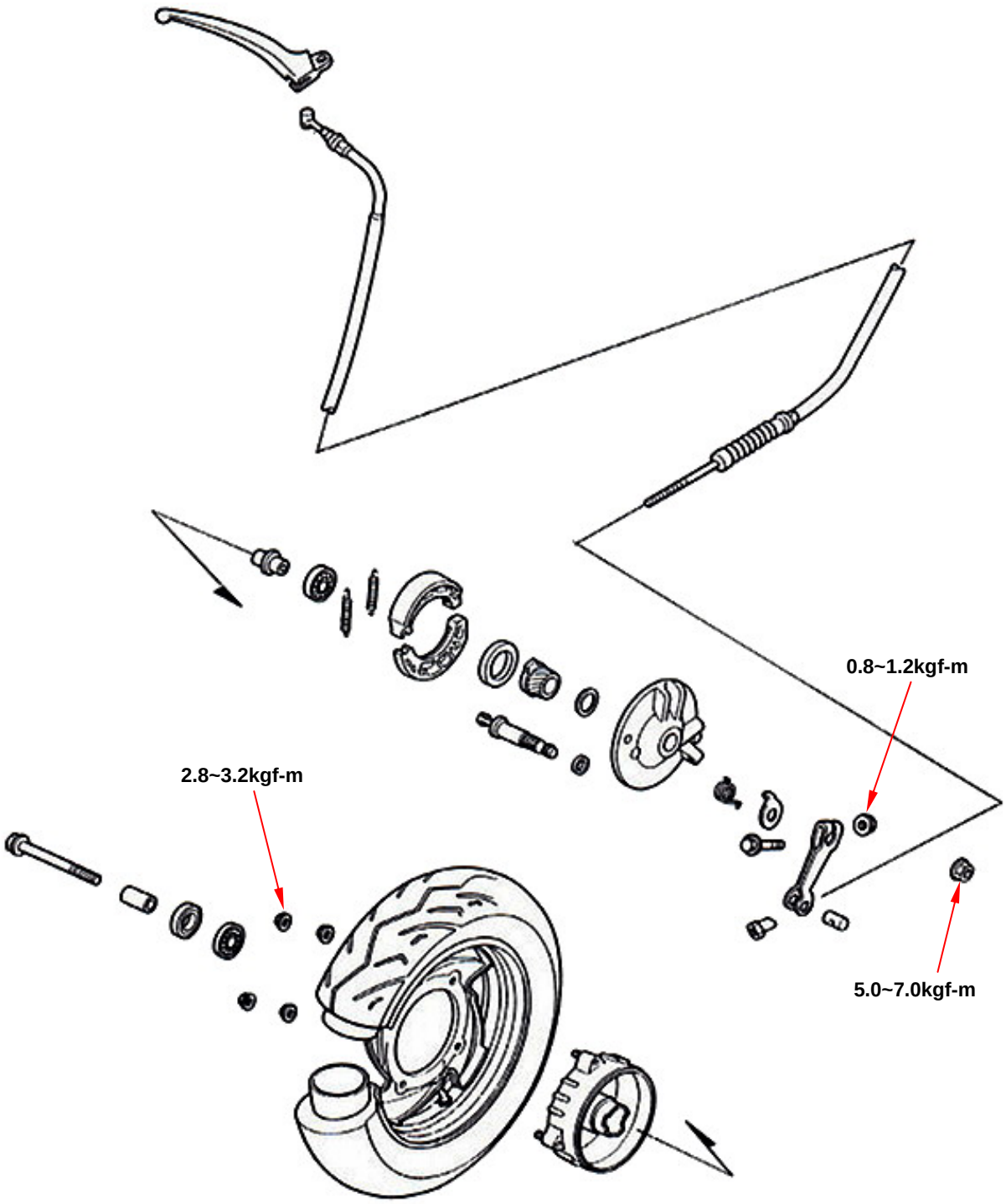

Mechanism Diagram-Rear Drum Brake System

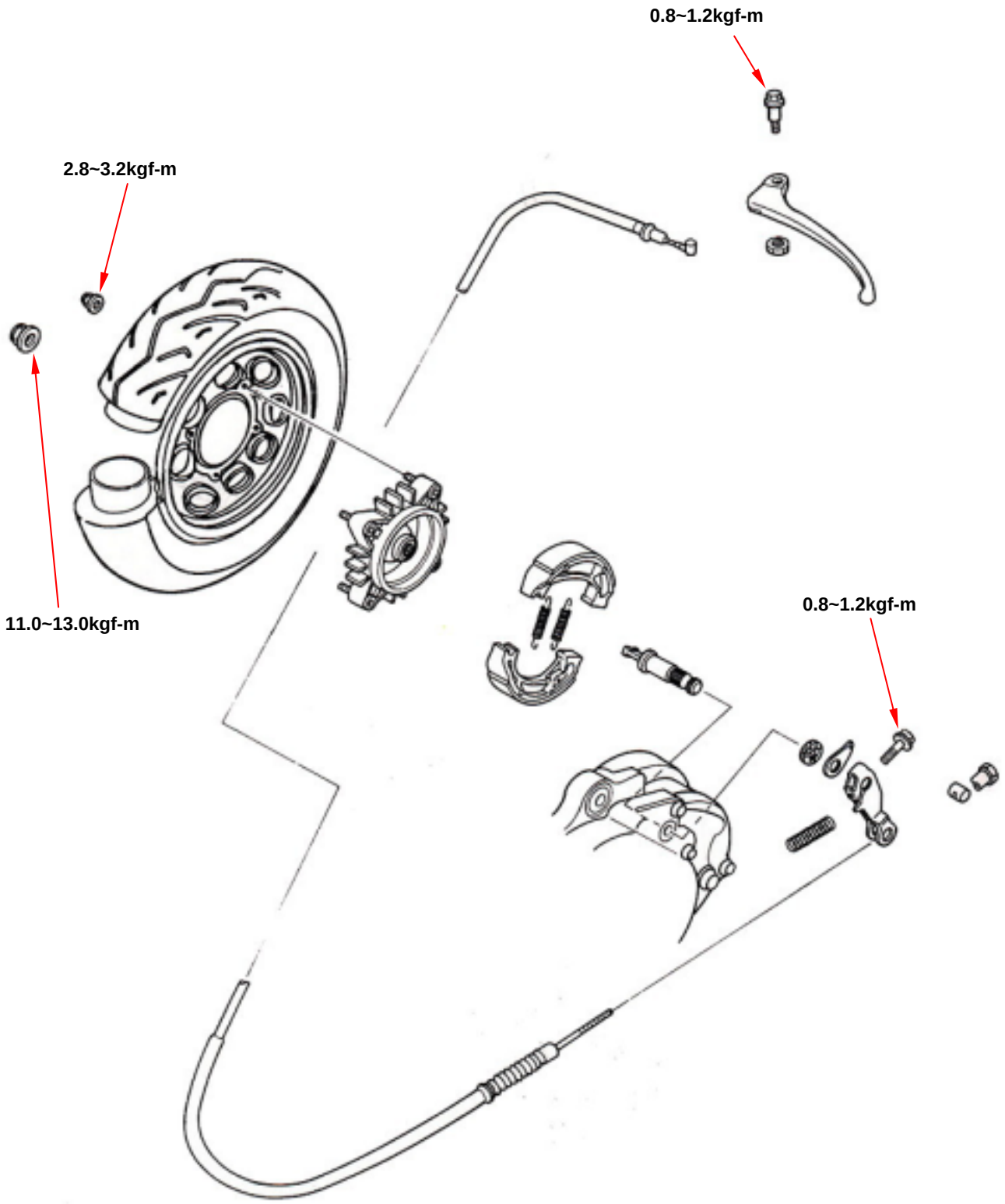

Operational Precautions

General information

Caution

- Inhaling asbestos may cause disorders of respiration system or cancer, therefore, never use air hose or dry brush to clean brake parts. Use vacuum cleaner or other authorized tool instead.

- The brake caliper can be removed without removing the hydraulic system.
- After the hydraulic system is removed, or the brake system is felt to be too soft, bleed the hydraulic system.
- While refilling brake fluid, care should be taken not to let the foreign material entering into the brake system.
- Do not spill brake fluid on the painted surfaces, plastic or rubber parts to avoid damage.
- Check the operation of the brake system before you go.

Specifications

Unit: mm

Item	Standard (mm)	Limit (mm)
The thickness of front brake disc	**3.50**	**2.00**
Front brake disc eccentricity	**0.10**	**0.30**
Master cylinder inner diameter	**11.000~11.043**	**11.055**
ID of front & rear brake drums	**HU10U/W：110/110** **HU05U：110/95**	**HU10U/W：110.50** **HU05U：95.50**
OD of front brake disc	**160.00**	—
Thickness of front disc brake lining	—	As brake lining mark
Thickness of front drum brake lining	—	2mm or As brake lining mark
Thickness of rear brake lining	—	2mm or As brake lining mark

Torque values:

Bolt for front brake arm	0.8~1.2kgf-m
Bolt for rear brake arm	0.8~1.2kgf-m
Brake hose bolt	3.3~3.7kgf-m
Bolt for brake caliper	3.1~3.5kgf-m
Air-bleed valve of front brake	0.8~1.0kgf-m

Trouble Diagnosis

Disc Brake

Soft brake lever

1. Air inside the hydraulic system
2. Hydraulic system leaking
3. Worn master piston
4. Worn brake pad
5. Poor brake caliper
6. Worn brake lining/disc
7. Low brake fluid
8. Blocked brake pipe
9. Warp/bent brake disc
10. Bent brake lever

Hard operation of brake lever

1. Blocked brake system
2. Poor brake caliper
3. Blocked brake pipe
4. Seized/worn master cylinder piston
5. Bent brake lever

Uneven brake

1. Dirty brake lining/disc
2. Poor wheel alignment
3. Clogged brake hose
4. Deformed or warped brake disc
5. Restricted brake hose and fittings

Tight brake

1. Dirty brake lining/disc
2. Poor wheel alignment
3. Deformed or warped brake disc

Brake noise

1. Dirty lining
2. Deformed brake disc
3. Poor brake caliper installation
4. Imbalance brake disc or wheel

Drum Brake

Poor brake performance

1. improper brake adjustment
2. worn brake lining
3. worn brake drum
4. worn brake cam
5. improper brake lining installation
6. seized brake cable
7. Dirty brake lining
8. Dirty brake drum
9. brake pad worn in brake cam area.
10. poor contact between brake arm and camshaft indent

Tight operation or low return speed of brake lever

1. worn/broken/crack return spring
2. worn drum
3. Dirty brake lining
4. brake seized caused from dirty brake drum
5. seized brake cable
6. worn brake cam
7. improper brake lining installation

Brake noise

1. worn brake lining
2. worn drum
3. Dirty brake lining
4. Dirty brake drum

Hydraulic Brake System Inspection

Inspection of Hydraulic Brake System Inspection

Visual inspect for brake fluid leaking or damage. Check if brake hose connections loosen with wrench and turn the handlebar from right to left motion or press down the shock absorber to check if there is something is interfered with the brake system or brake components.

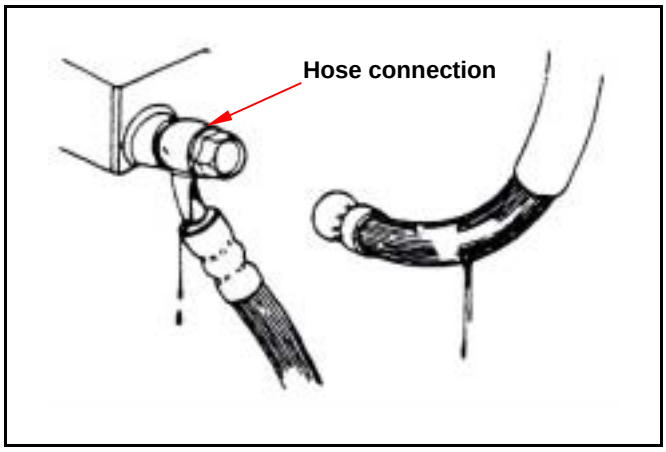

Operate the brake system and check the brake lining. Check the front brake from front side, and replace the brake lining with new one when the brake lining wear limitation groove reaches to the brake disc.

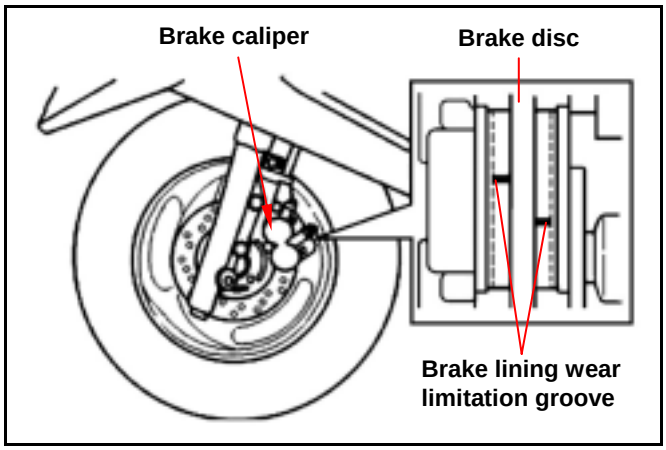

Park the motorcycle on a flat ground and check its brake fluid level.

Recommended brake fluid: WELLRUN DOT 3 brake fluid

Caution

- The fluid level will not be correct if parking the motorcycle in title or just parking. It has to waiting for around 3~5 minutes.
- Never use faked brake fluid to prevent from chemical reaction.
- It has to apply with same brand brake fluid to sure the brake performance.

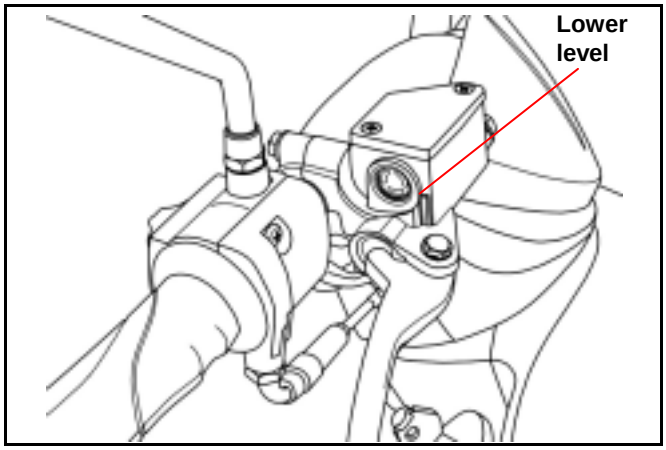

Brake Fluid Add

Turn the handlebar to let the master cylinder in horizontal position before removed the master cylinder cap.

Place a rag onto painting, plastic or rubber components when conduct brake system maintenance.

Caution

- Do not over the upper level when adding brake fluid and avoid to spilling brake fluid on painted surfaces, plastic or rubber components to result in their damages.

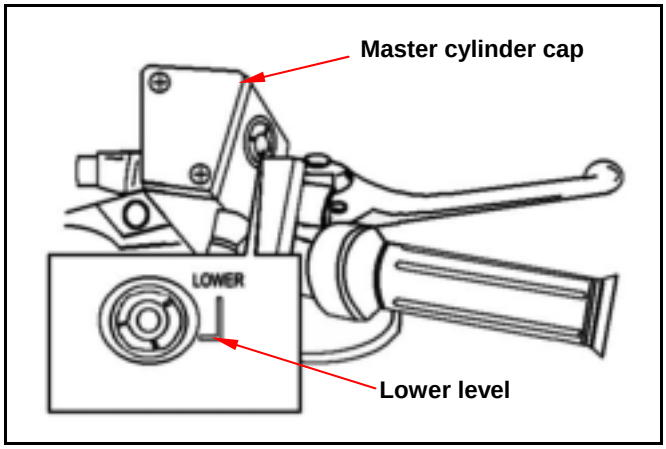

Remove the master cylinder cap and diaphragm.
Add good quality brake fluid and it has to add same brand brake fluid into the master cylinder.
Clean dirty brake disc.

Caution

- The dirty brake lining or disc will reduce the brake performance.
- The mixed non-compatible brake fluid will reduce brake performance.
- Foreign materials will block the system causing brake performance to be reduced or totally lost.

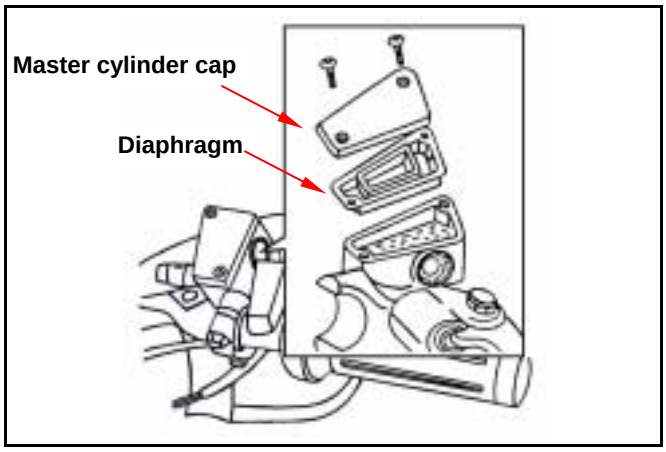

Brake Fluid Replacement / Air-Bleed

Connect drain hose to drain valve.
Open the drain valve on the caliper and hold and release the brake lever alternatively until the old brake fluid is entirely drained out.
Close the drain valve and add specified brake fluid into the brake master cylinder.

Caution

- To reuse the spent brake fluid will affect brake performance.

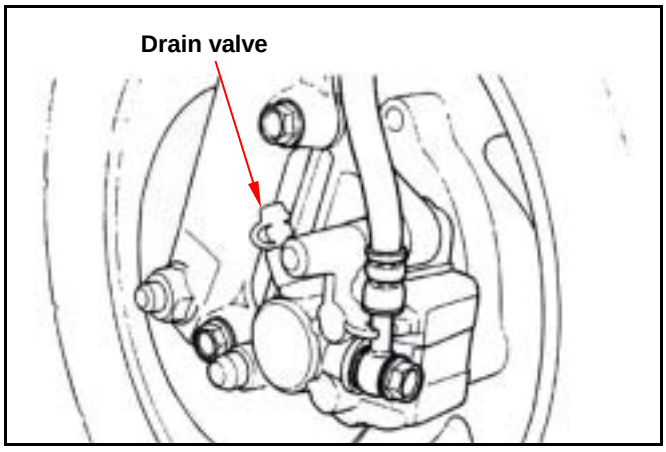

Connect one end of transparent hose to the drain valve, and put the other end into a container.
Open the drain valve around 1/4 turns, and at the same time hold the brake lever until the there is no air bubble in the drain hose and also feeling resistance on the brake lever.
Close the drain valve when finishing the brake system refilling fluid procedure, and operate the brake lever to check whether air bubble is in brake system or not. If brake is still soft, please bleed the system as described below.

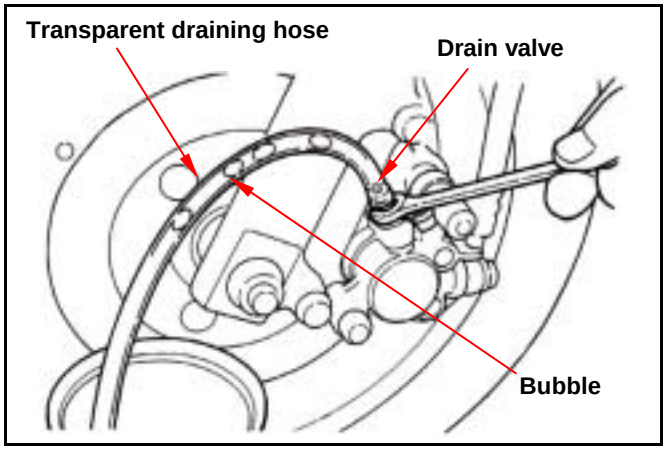

1. Tightly hold the brake lever and open the drain valve around 1/4 turns, and then close the valve.

Caution

- Do not release the brake lever before the drain valve is closed.
- Always check the brake fluid level when carrying out the air bleeding procedure to avoid air entering into the system.

2. Slowly release the brake lever, and wait for a few seconds until it reaches its top position.
3. Repeat the steps 1 and 2 until there is no air bubble at the end of the hose. Tightly close the drain valve.
4. Make sure the brake fluid is in the UPPER level of the master cylinder, and refill the fluid if necessary.
5. Cover the cap.

Brake Caliper

Removal

Place a container under the brake caliper, and loosen the brake hose bolt and finally remove the brake hoses.

⚠ Caution

- Do not spill brake fluid on painted surfaces.

Remove two caliper bolts and the caliper.

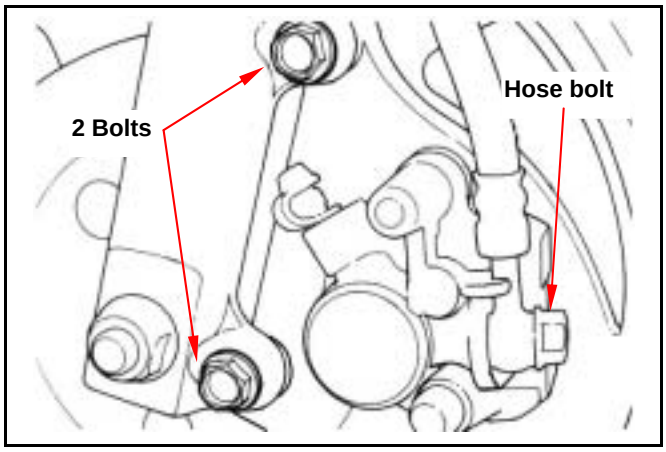

Make sure the brake lining condition. Replace the lining if the brake lining wear limitation groove close to the brake disc.

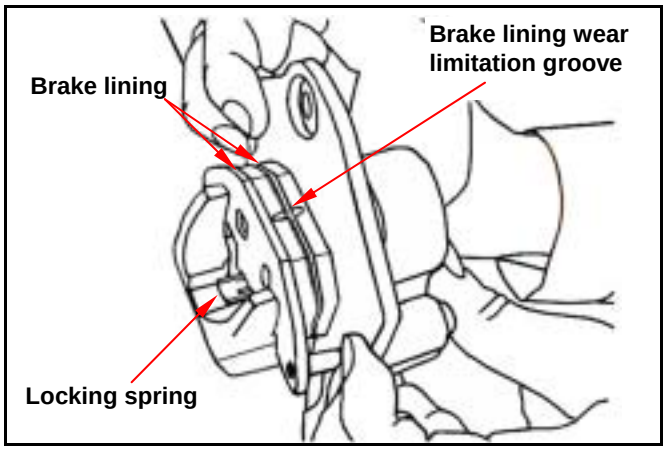

Brake Lining Replacement

Compress the caliper and let the brake lining out of the caliper mounting plate. Compress the brake lining locking spring. Remove the inner brake lining firstly and then remove the outer brake lining.

Compress the brake caliper at first as installation. Install the inner brake lining firstly, and then install the outer brake lining.

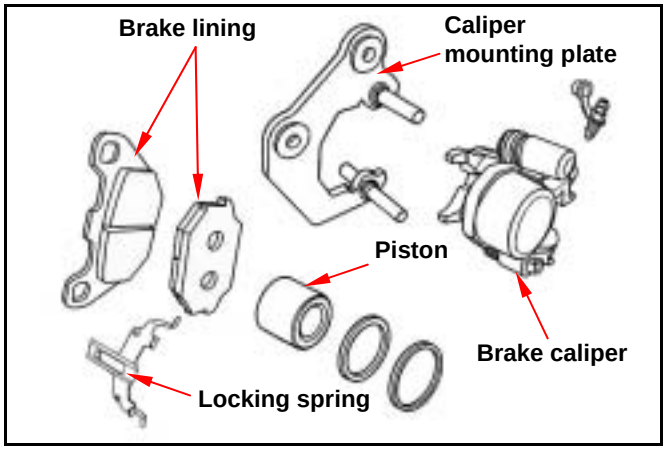

Installation

Install the brake caliper and tighten the attaching bolts securely.

Torque: 3.1~3.5kgf-m

⚠ Caution

- Use M8 x 35 mm flange bolt only.
- Long bolt will impair the operation of brake disc.

Use two seal washers and hose bolts to lock the hose and brake caliper in place.

Torque: 3.3~3.7kgf-m

Refill up the brake fluid to the reservoir and make necessary air bleeding.

Brake Disc

Inspection

Visually check the brake disc for wear or break.
Measure the thickness of the disc at several places. Replace the disc if it has exceeded the service limit.
Allowable limit: 2.0 mm

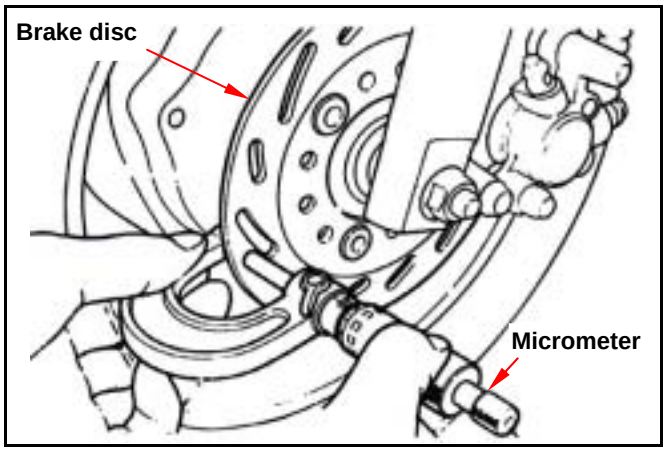

Remove the brake disc from wheel.
Check the disc for deformation and bend.
Allowable limit: 0.30 mm

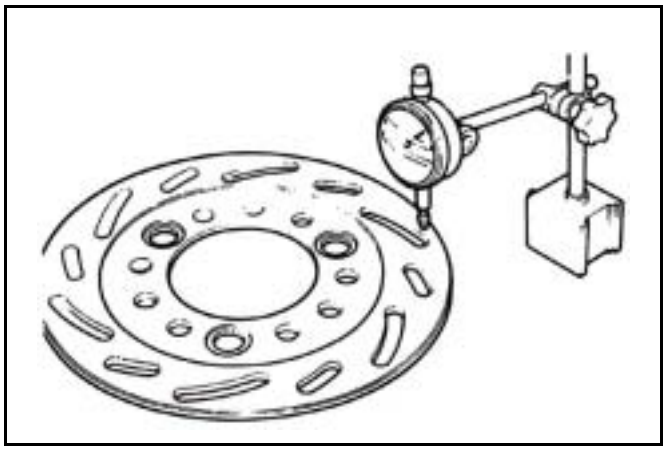

Caution

- Do not let grease touch to the brake disc that will cause brake performance.
- Do not clean the brake lining with air gun because the lining is contained asbestos. Operator should wear mask & glove and use vacuum cleaner to clean the brake lining.

Brake Master Cylinder

Removal

Caution

- Do not let foreign materials enter into the cylinder.

Caution

- The whole set of master cylinder, piston, spring, diaphragm and cir clip should be replaced after removal.

Remove the front and rear handlebar guards.
Remove the leads of brake light switch.
Drain out the brake fluid.
Remove the brake lever from the brake master cylinder.
Remove the brake hose.
Remove the master cylinder seat and the master cylinder.
Remove the rubber pad.
Remove the cir clip.
Remove the piston and the spring.
Clean the master cylinder with recommended brake fluid.

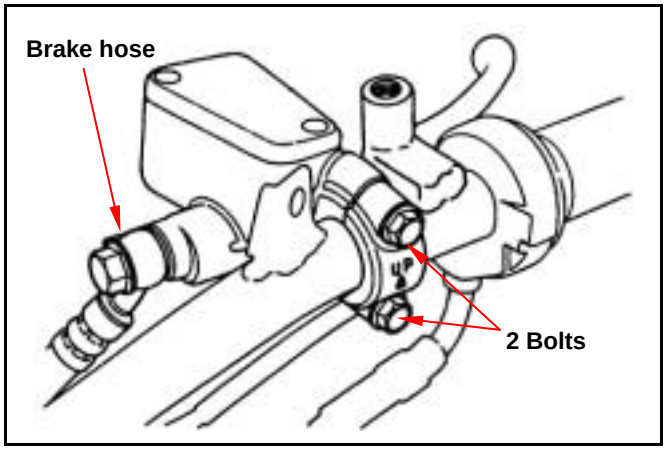

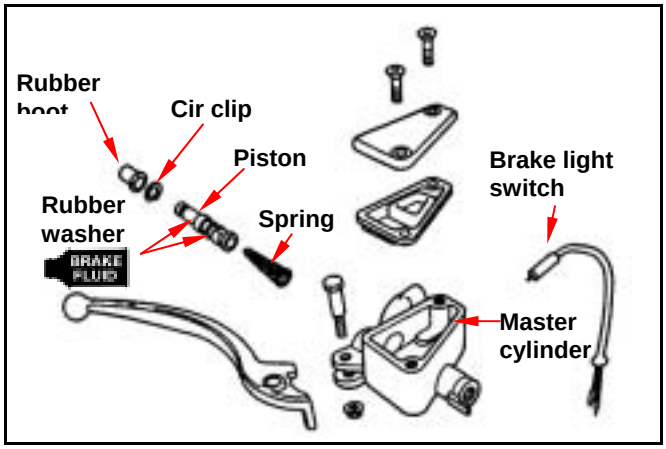

Inspection

Check the master cylinder for damage or scratch. Replace it if necessary.
Measure the cylinder inner diameter at several points along both X and Y directions.
Replace the cylinder if the measured values exceed allowable limit.
Service limit: 11.055 mm

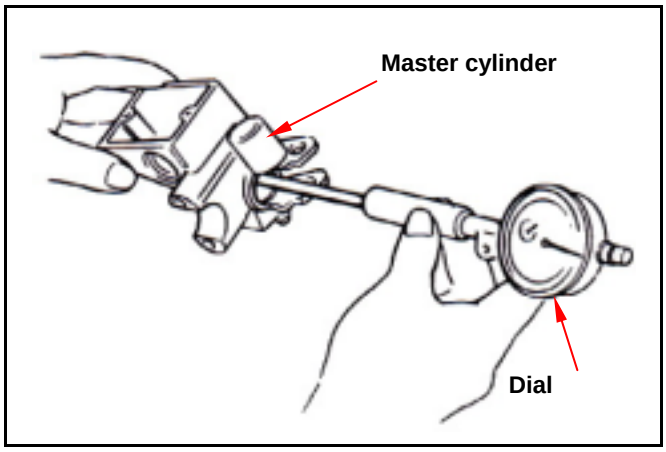

Measure the outer diameter of the piston.
Replace the piston if its measured value exceeds allowable limit.
Service limit: 10.945 mm

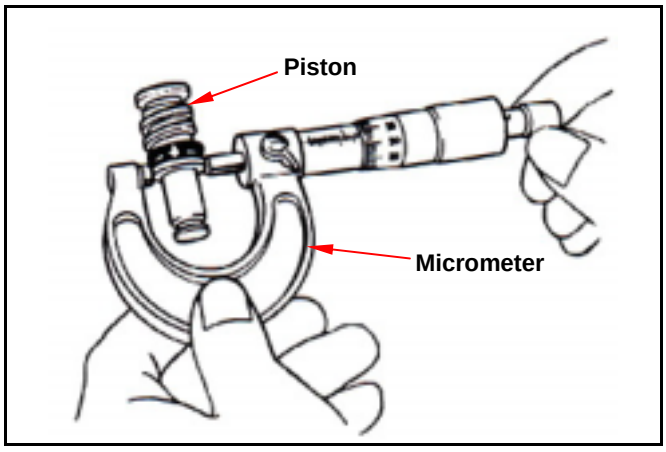

Assembly

Caution

- It is necessary to replace the whole set comprising piston, spring, piston cup, and cir clip.
- Make sure there is no dust on all components before assembling.

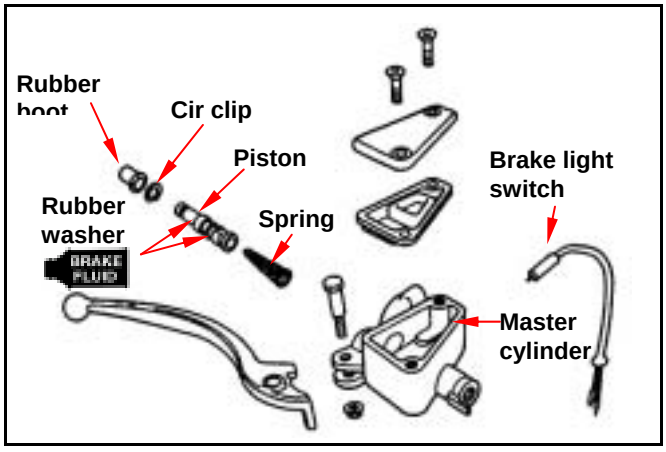

Apply clean brake fluid to the piston cup, and then install the cup onto the piston.
Install the larger end of the spring onto the master cylinder.
The master cup's cavity should be face inside of master cylinder when installing the master cup.
Install the cir clip.

Caution

- Never install cup lip in the opposite direction.
- Make sure the cir clip is seated securely in the groove.

Install the rubber pad into groove properly.

Installation

Place the master cylinder onto handlebar, and install the split ring and bolts. The “UP” mark on the split ring should face upward.
Align the split ring on the master cylinder seat with the alignment point on the handlebar.
Tighten the upper bolt of the seat to specified torque value, and then tighten lower bolt to the same specified torque value.

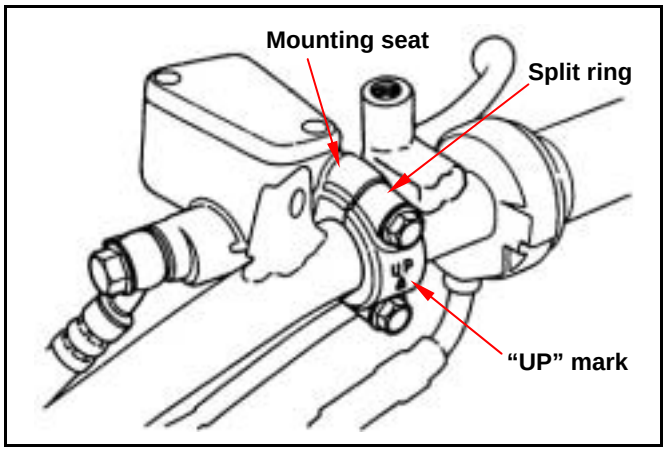

Install the brake lever, and connect leads to brake light switch.
Connect brake hoses with 2 new washes.
Tighten the brake hose bolt to the specified torque value.
Torque value: 3.3~3.7kgf-m
Make sure the hose is installed correctly.

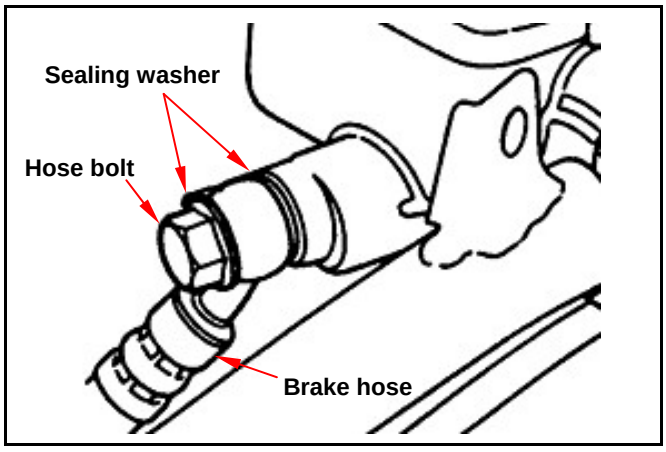

Caution

- Improper routing may damage leads, hoses or pipes.

Caution

- Kink of brake leads, hose or pipe may reduce brake performance.

Add recommended brake fluid into the system and conduct the air-bleeding job for the system.

Drum Brake System

Brake Drum

Removal

Use a vacuum cleaner and other suitable tools to clean the brake parts to minimize the hazard caused by the asbestos dust.

Caution

- Inhaling asbestos dust may cause respiration system disorder even cancer. Never use an air hose or a dry brush as to clean the brake parts.
- Grease on brake lining will reduce braking efficiency.

Inspection

Remove the brake drum from wheel rim.
Check the brake drum for wear and damage, replace wheel hub if necessary.
Measure the ID of hub at several points and record the largest value.

Service limit:	**HU10U**	**111.5 mm**
	HU05U	**95.50 mm**

Caution

- Remove the rust by using #120 sand papers.
- An inside micrometer must be used when measuring ID of brake drum because the brake drum has a friction back plate.

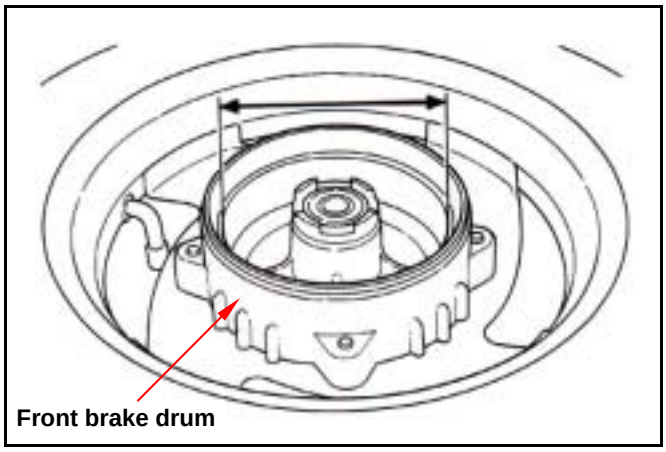

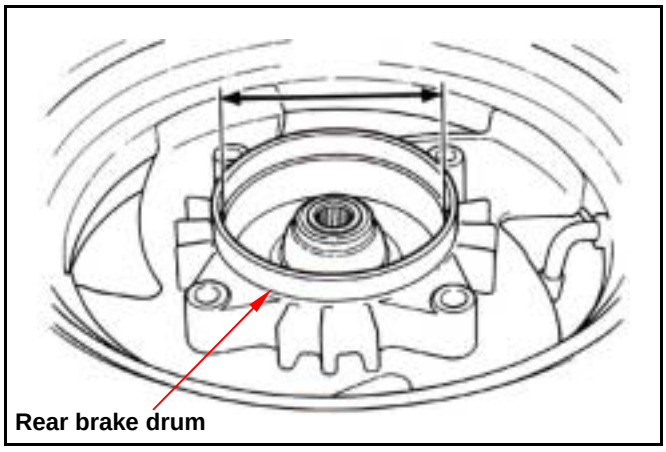

Brake Lining

Inspection

Measure the thickness of the brake lining at three points (both ends and center).
If the thickness is less than specified, or if it is contaminated by oil or grease, replace as a set.

Service limit:	**Front**	**2.0 mm**
	Rear	**2.0 mm**

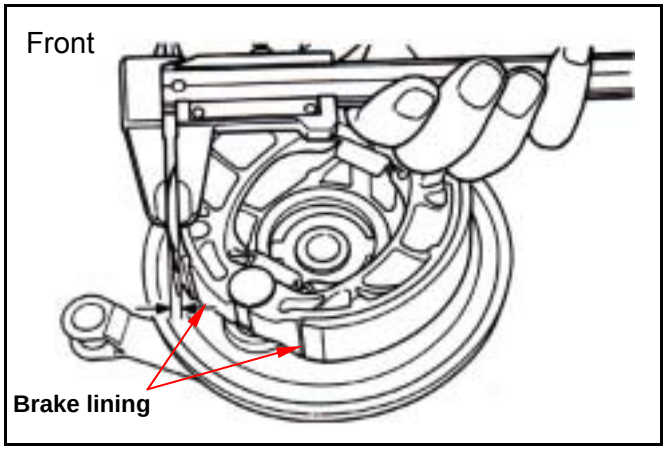

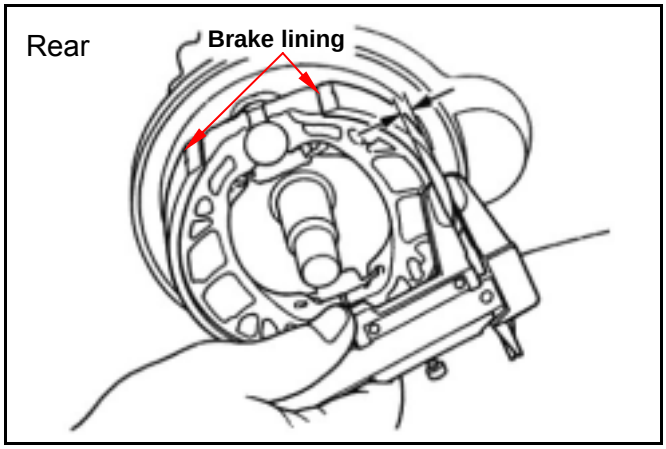

Removal

Caution

- Brake linings must be replaced as a set.

Remove brake shoes from the brake panel by pulling out the brake linings.

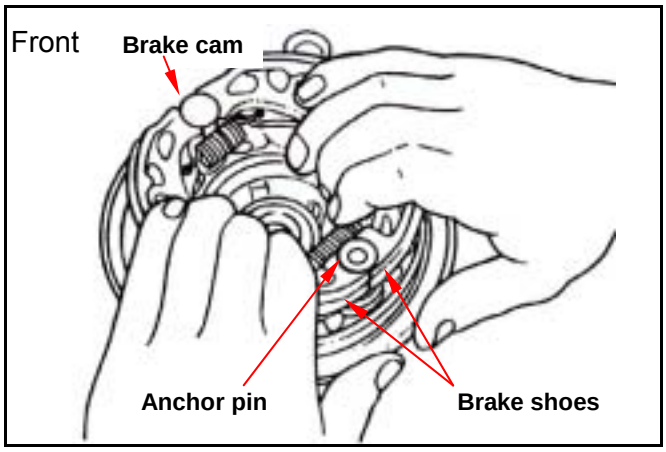

Installation

Apply a thin coat of grease to the brake cam and the anchor pin.
Hook the brake spring onto the brake cam.
Pull out the brake linings and install them onto the brake panel.
Wipe off the excessive grease from the brake cam and the anchor pin after installation.
Slightly grind the brake lining surfaces with sand-paper to clean the surfaces.

Caution

- Braking efficiency will be reduced if brake lining is contaminated by oil or grease.

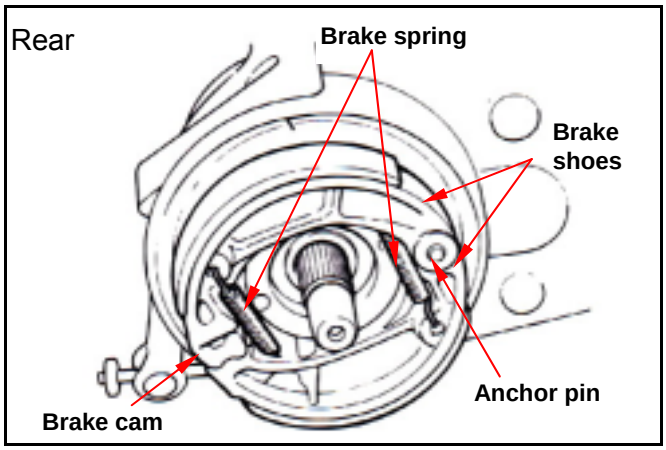

Brake Panel

Front Brake Panel Removal

Remove the brake arm nut, bolt and then remove the brake arm, wear indicator, brake return spring and brake cam as well as the oil seal from the brake panel.

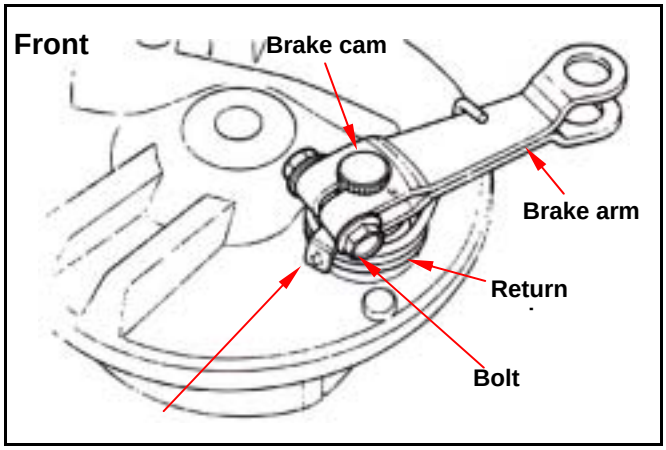

Rear Brake Panel Removal

Remove the brake arm bolt and then remove the brake arm, brake return spring and brake cam as well as the oil seal from the brake panel.

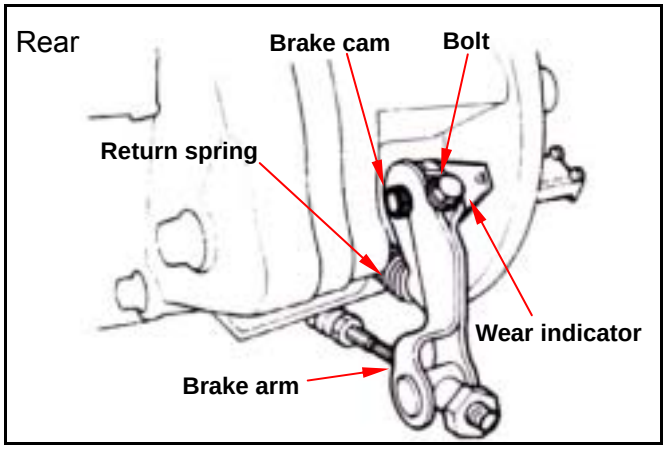

Installation

Front brake panel

Apply a thin cost of grease onto the brake cam shaft.
Install the brake cam.
Apply a thin cost of grease onto the oil seal lip and then install the oil seal onto the brake cam shaft.
Finally, install it on the brake panel.
Align the end-part of the brake return spring with the hole of brake panel.
Align both the inner gear of wear indicator and the mark on the brake arm with the indent gear of brake cam, and then install it.
Tighten the bolts and nuts to specified torque.
Torque: 0.8~1.2kgf-m

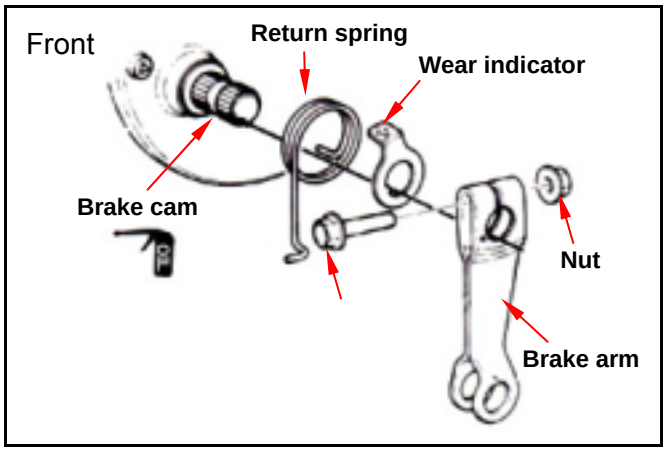

Rear Brake Panel

Apply a thin cost of grease between the oil seals on the brake cam shaft.
Install the brake cam.
Align the mark on the brake arm with the inner gear of the brake cam.
Tighten the bolts and nuts to specified torque.
Hook on the return spring.
Torque: 0.8~1.2kgf-m

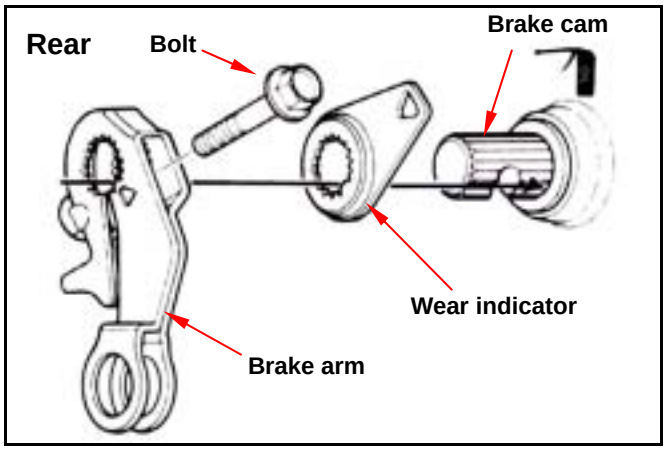

14. Steering / Front Wheel / Front Cushion

Mechanism Diagram ·····14-1	Front Wheel ····· 14-5
Operational Precautions·····14-2	Front Cushion ····· 14-10
Trouble diagnosis ·····14-2	Front Fork / Steering Column ····· 14-10
Steering Handle·····14-3	

Mechanism Diagram

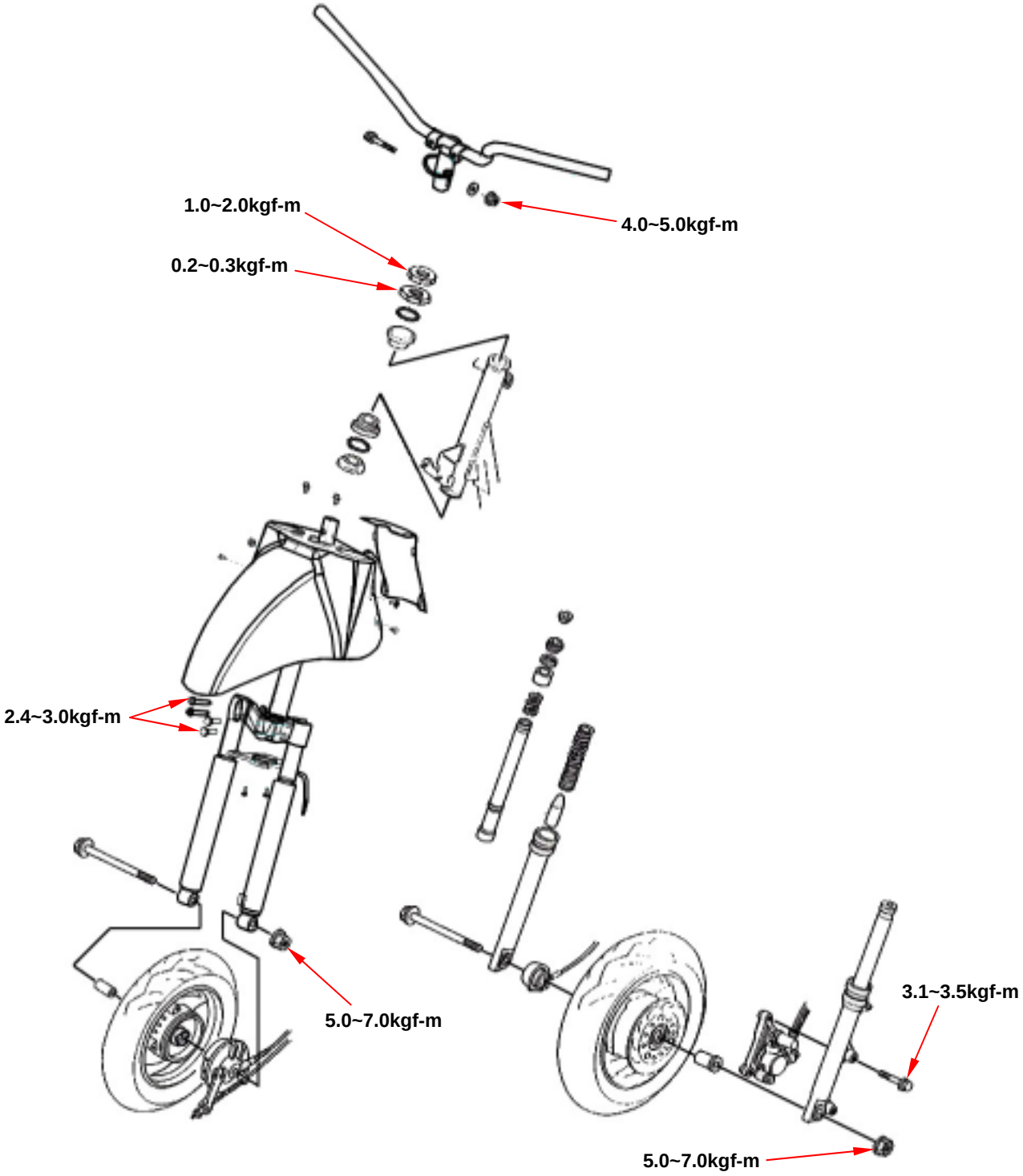

Operational Precautions

General information

- Before remove front wheel, use a jack to lift the body until front wheel free of ground, and take care not to rotate body in reverse.
- Be careful not to allow oil or grease get on brake drum, disk or linings.

Torque values

Front wheel axle nut	5.0~7.0kgf-m
Steering handle nut	4.0~5.0kgf-m
Steering column top cone sliding ring	0.2~0.3kgf-m
Steering column lock nut	1.0~2.0kgf-m
Speedometer cable screw	0.15~0.3kgf-m
Front cushion: Upper nut	2.4~3.0kgf-m
Front brake caliper bolt	3.1~3.5kgf-m

Special service tools

Steering column wrench
Bearing remover
Inner type bearing remover SYM-6204002
Attachment, 32×35 mm
Attachment, 42×47 mm
Steering column nut wrench
Steering column top cone ring nut wrench

Trouble diagnosis

Hard steering stem

- Over tightening of steering stem lock nut
- Broken steering stem steel ball
- Damaged steering stem steel ball
- Insufficient tire pressure

Steering stem off center

- Uneven left/right cushion
- Bend fork
- Bent front wheel/tire offset

Front wheel wobbling

- Deformed rim
- Front wheel bearing loose
- Faulty tire
- Wheel axle nut tightened improperly

Soft front suspension

- Weak fork springs
- Cushion seal leaking

Front suspension noise

- Cushion cover friction noise
- Cushion bolts loose

Steering Handle

Removal

Remove handle front & rear covers, meter and the front cover (refer to chapter 12).

Drum Brake Type

Remove the rear brake lever bolt & nut, and then remove the front brake cable.

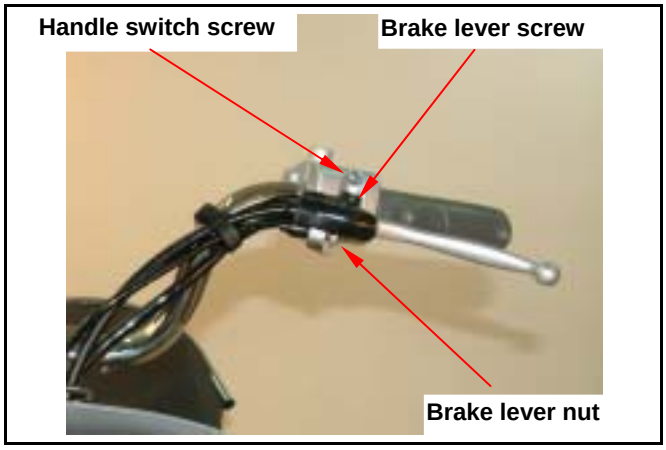

Remove left handle screw and cable clamp.
Remove the left handle switch.

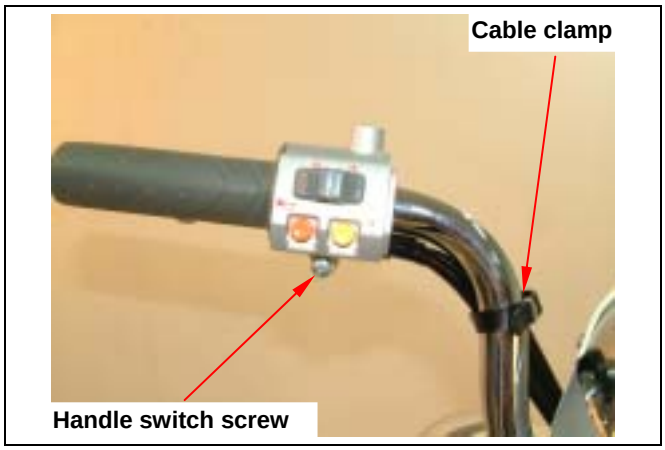

Remove the front brake lever bolt & nut, and then remove the front brake cable.

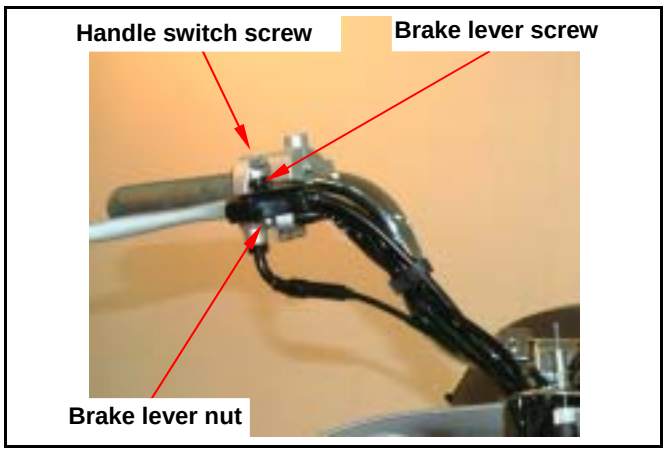

Remove right handle screw and cable clamp.
Remove the right handle switch, throttle cable.

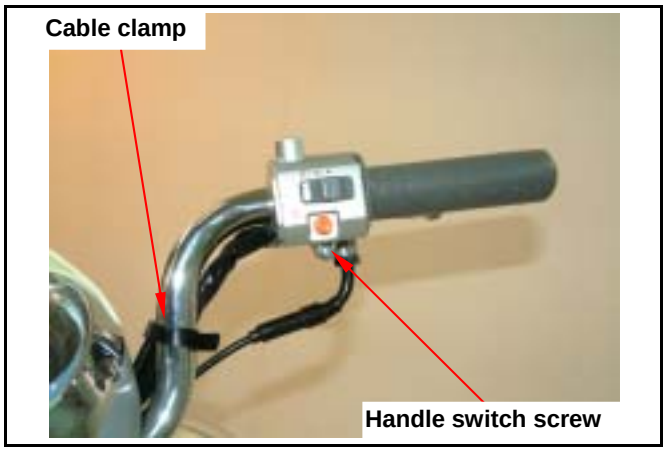

Disc Brake Type

Remove the 2 bolts of the brake master cylinder, and then take out the master cylinder and the split ring.

Caution

- Do not operate the front brake lever to avoid to pressing out the brake lining when removing the master cylinder.

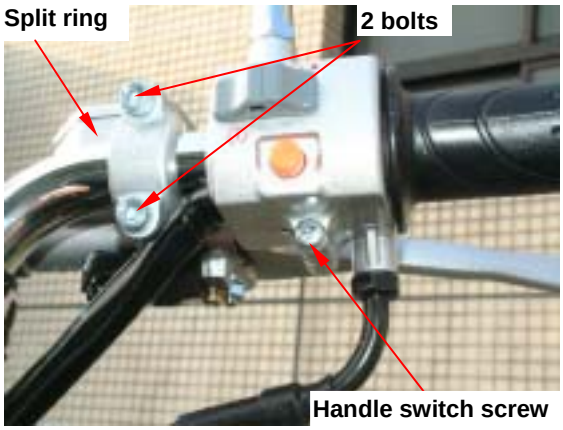

Remove handle switch screw and then remove the throttle grip, throttle cable, and handle switch cover & seat.

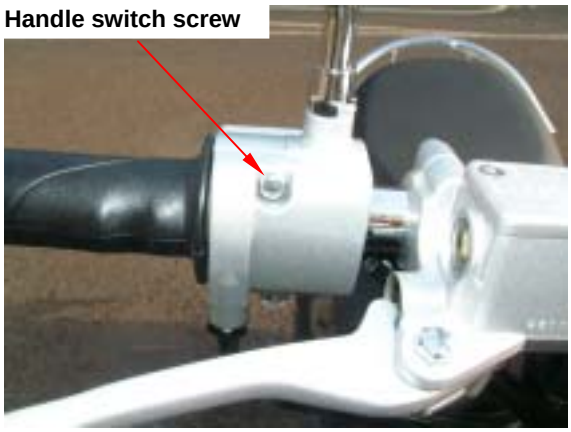

With a wrench to hold the handles bolt and then remove the nut.
Take out the handle after removed the bolt.

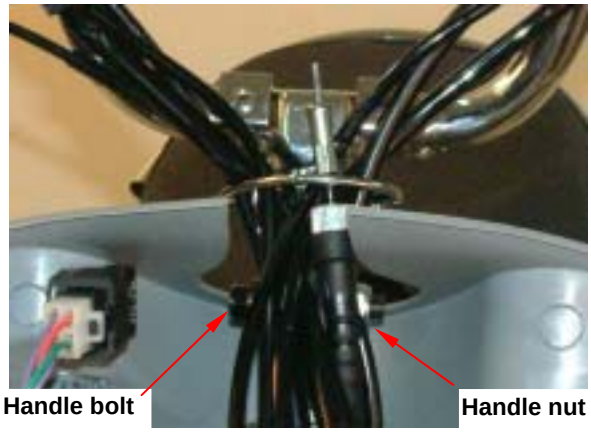

Installation

Install the handle according to the reverse procedure of removal.
Apply with some grease onto the handle moving parts when installing the handle switch seat, throttle grip, and throttle cable.

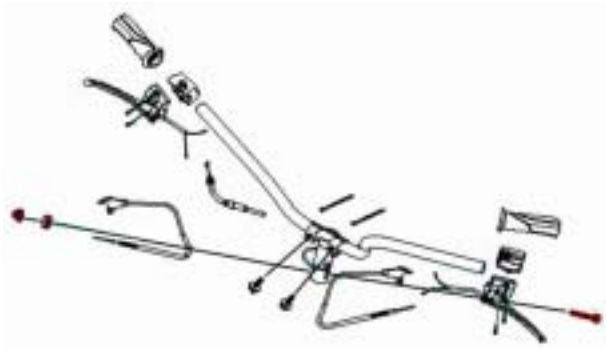

Front Wheel

Removal

Disc Brake

Support body bottom and lift front wheel free of ground with a stand.
Remove the screw, and disconnect speedometer cable from the gear box.

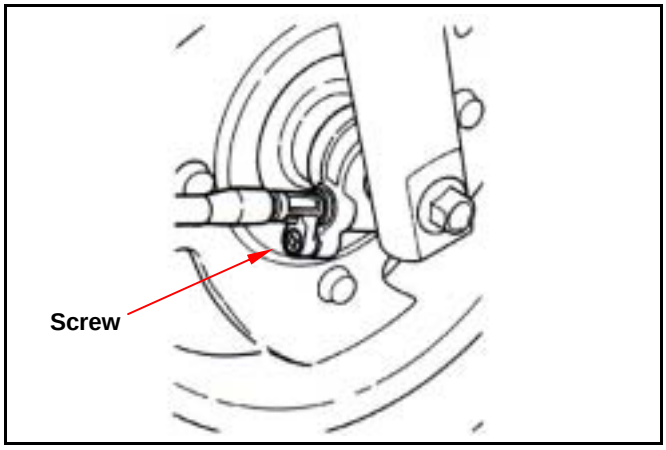

Remove the wheel axle nut and pull out the axle. Then, remove the front wheel.

Caution

- Do not operate the front brake lever to avoid to pressing out the brake lining when removing the master cylinder.

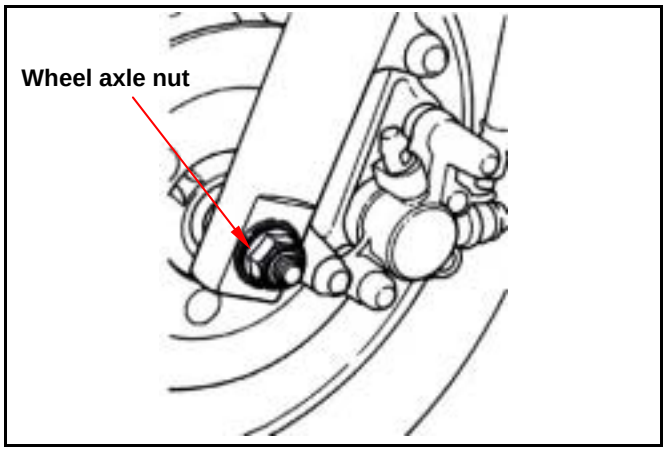

Drum Brake

Support body bottom and lift front wheel free of ground with a stand.
Remove the bolts, and disconnect speedometer cable.
Remove the wheel axle nut and pull out the axle. Then, remove the front brake panel and the front wheel.

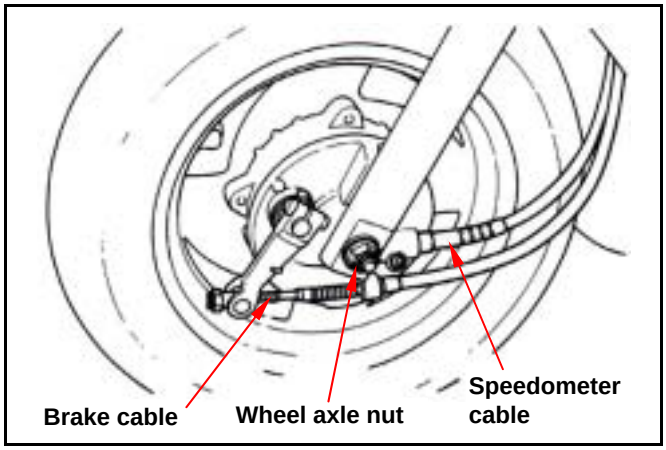

Inspection

Wheel axle

Set the axle in V-blocks and measure the run-out.
Service limit: above 0.2 mm.

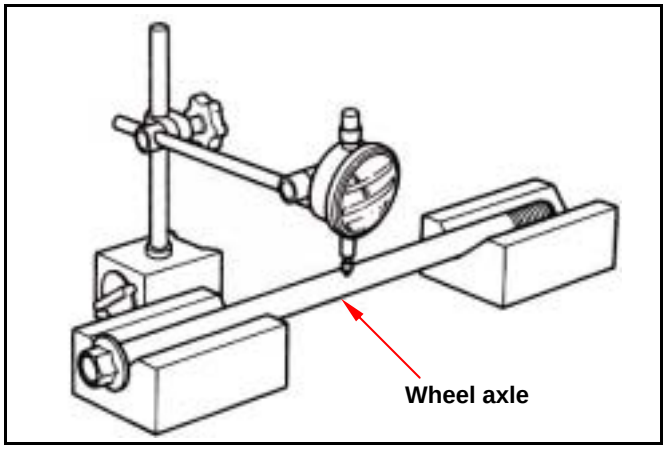

Wheel Rim

Place the wheel onto a rotated bracket.
Turn the wheel with hand and measure its wobble value with a dial gauge.
Service limit:
Radial : above 0.2 mm
Axial : above 0.2 mm

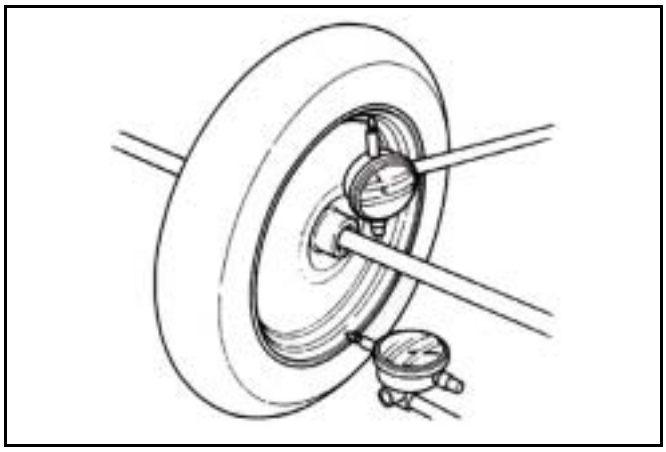

Disassembly (Disc brake type)

Remove 3 socket-hex head bolts and the brake disc.

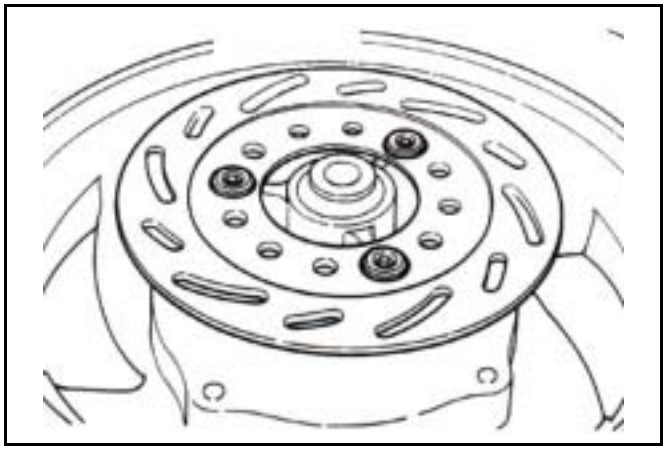

Remove the left axle ring and dust seal.
Remove the dust seal on the right side of speedometer gear.
Remove the bearing with the inner type bearing remover.
Take out the bearing spacer and then remove the other bearing.
Tool:
Inner type bearing remover SYM-6204002

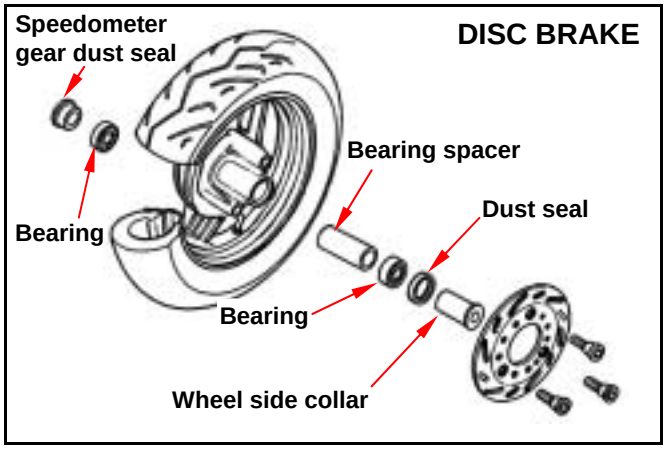

Disassembly (Drum Brake Type)

Remove the right dust seal.

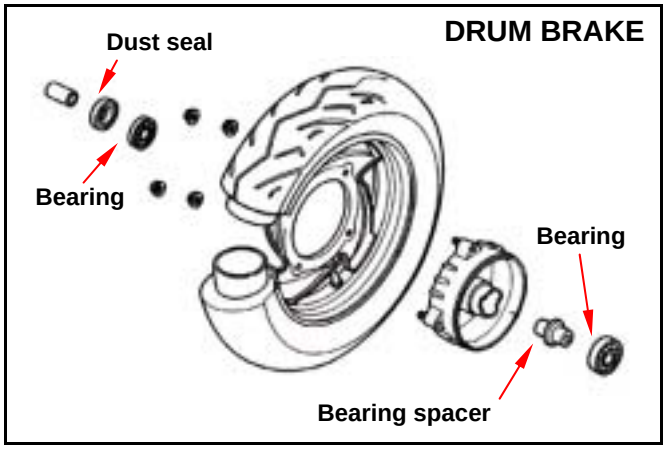

Remove the bearing with the inner type bearing remover.
Take out the bearing spacer and then remove the other bearing.

Tool:
Inner type bearing remover SYM-6204002

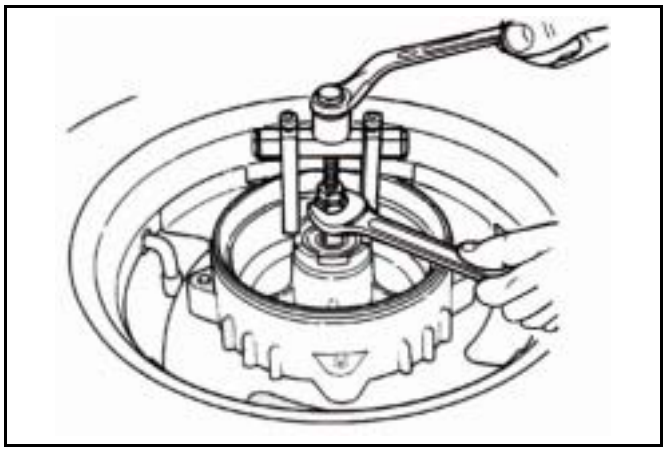

Bearing Inspection

Turn the inner race of bearing with fingers. The bearing should be turn smoothly. Also check if the outer collar is tightly connected to the wheel hub. If the bearing does not turn smoothly, or if they are too loose in the races, or noising, then, remove and replace the bearings with new ones.

Caution

- The bearing must be replaced in pair.

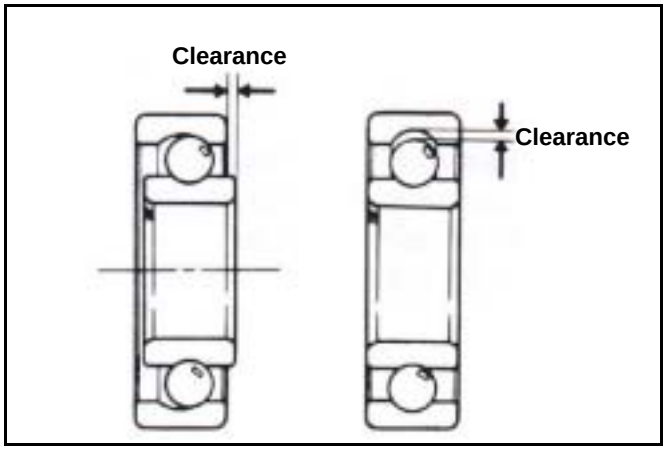

Installation

Install the bearing according to the reverse procedure of removal.
Apply some grease into the bearing seat of the wheel hub.
Install the left bearing onto the seat.
Install the bearing spacer and then install the right bearing onto the seat.

Caution

- Do not install used bearing and replace the bearing once it has been removed.
- Do not the bearing in tile motion when installing.

Tool:
C-type compressor or bearing compressor

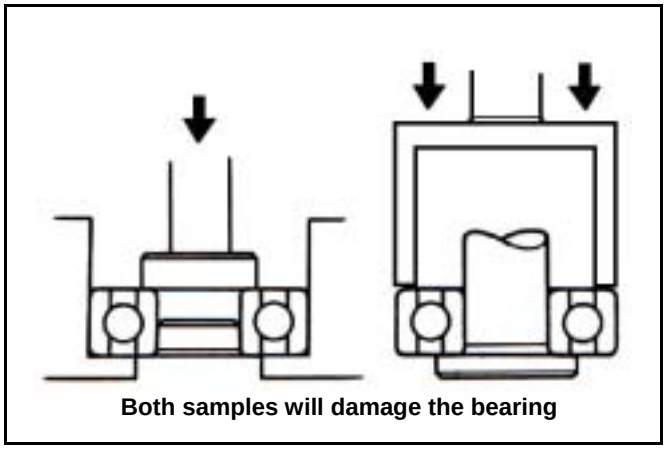

Installation

Disc Brake

Apply with some grease inside of the dust seal. Install the dust seal and the front wheel side collar. Apply with some grease on both sides of the speedometer gear oil seal, and then install the seal.

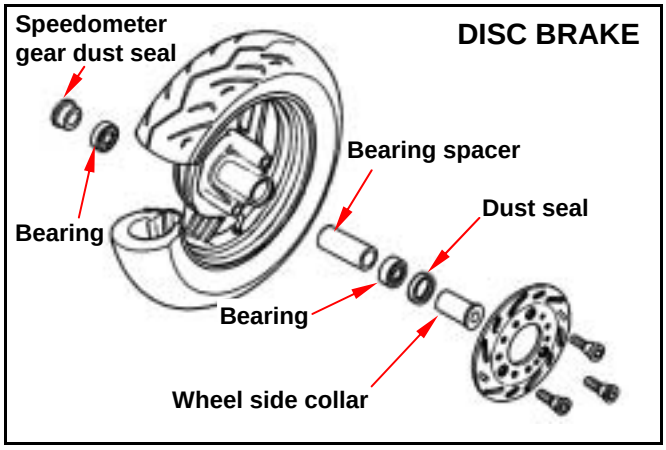

Drum Brake

Apply with some grease inside of the dust seal, and then install the seal and the front wheel side collar.

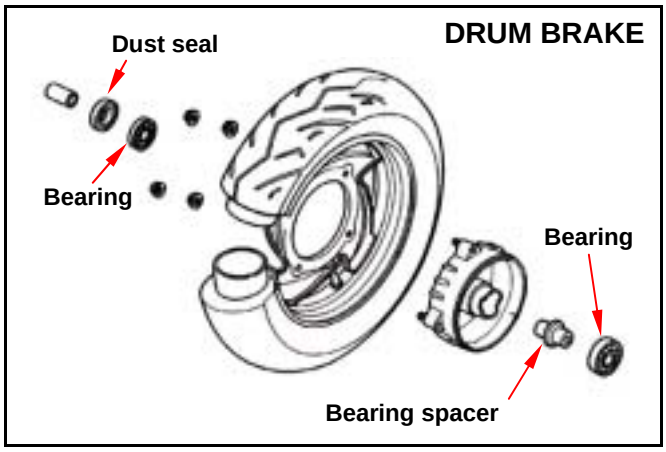

Drum Brake

Apply with some grease on the speedometer driving gear, and then install washer & driving gear into the brake panel.

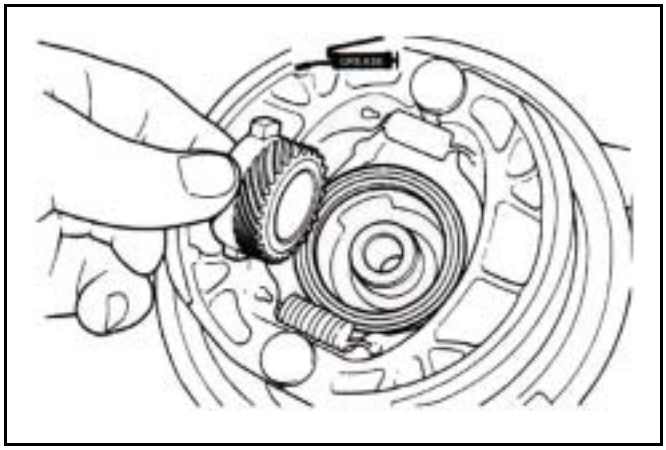

Align the flange part on the speedometer gear with the slot of wheel hub, and then install the brake disc (drum brake) or speedometer gear box.

Caution

- Contaminated brake lining will reduce brake performance so the brake lining, brake drum and disc must be free of grease.

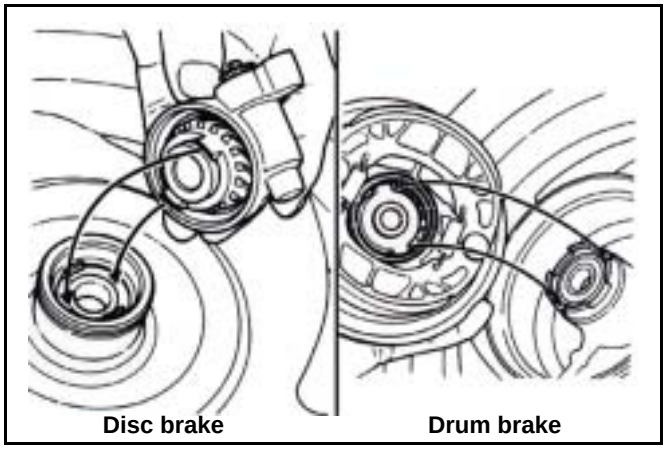

Place the front wheel between the front cushions.

Drum Brake

Align the brake panel slot with the stopper of the cushion.

Disc Brake

Align the flange part on the speedometer gear with the slot of cushion stopper.

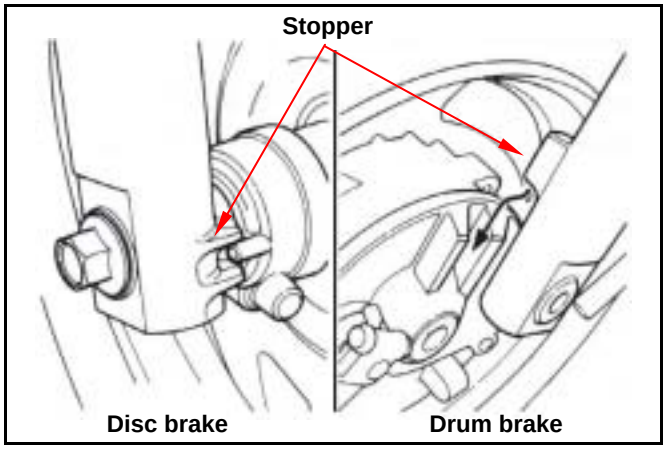

Disc Brake

Install the front wheel axle from right cushion side. Install the wheel axle nut, and tighten it to specified torque value.

Torque value: 5.0~7.0kgf-m

Connect the speedometer cable to the speedometer gear box.

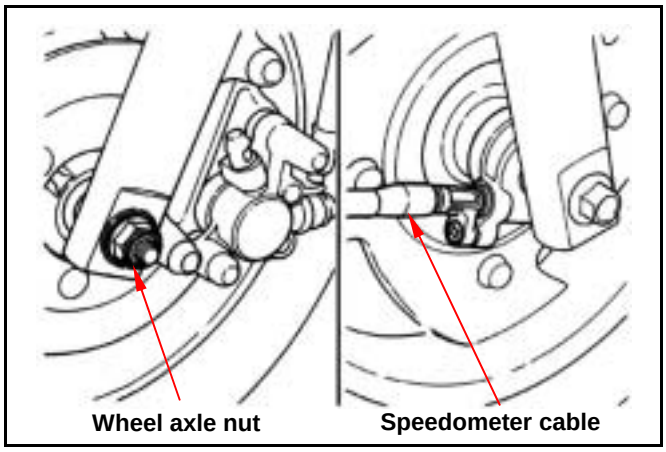

Drum Brake

Install the front wheel axle from right cushion side. Install the wheel axle nut, and tighten it to specified torque value.

Torque value: 5.0~7.0kgf-m

Connect the speedometer cable and brake cable to the brake panel.

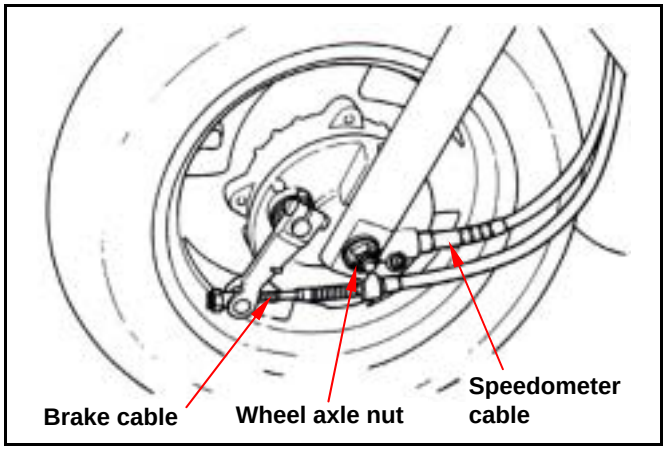

Front Cushion

Removal

Remove the front fender, front lower spoiler, front cover, and front wheel as well as front brake components.
Remove the brake fluid hose clipper or cable guide on the left cushion. (1 bolt)
As for disc brake, remove the cable guide on the right cushion. (1 bolt)

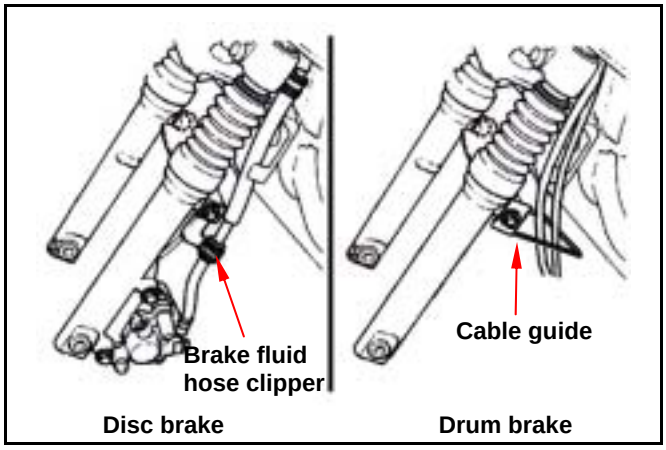

Remove the top connection bolt of the right cushion. (4 bolts)
Remove the cushion from the front fork.

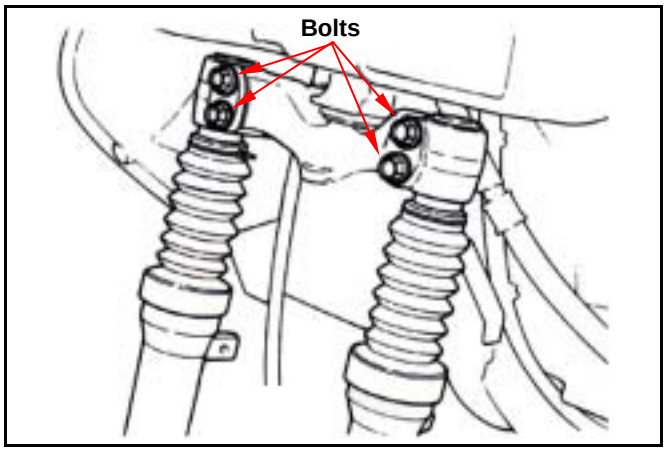

Installation

Install the cushions according to the reverse procedure of removal.
Align the cushion top-edge with the top-end level of the front fork when installing the front cushion onto the front fork. Then, tighten the nut.
Torque value: 2.4~3.0kgf-m

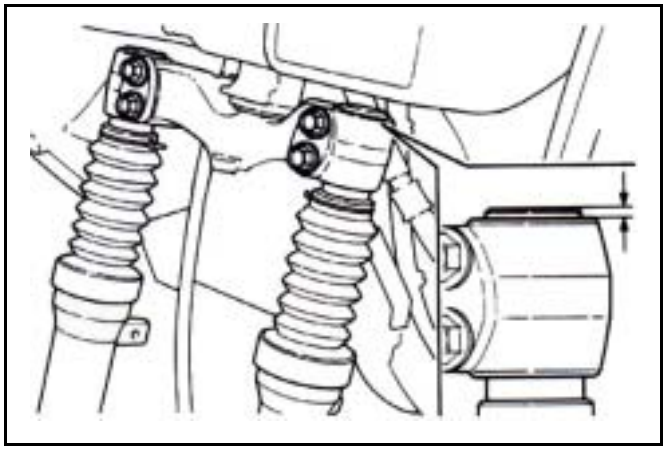

Front Fork / Steering Column

Removal

Firstly, remove the handle, front wheel, front brake set, and front cushions.
Remove the steering column nut.
Remove the top cone ring, and then remove the steering column.

Caution

- Place the steering column bearing balls into a parts container to avoid to missing or shortage.

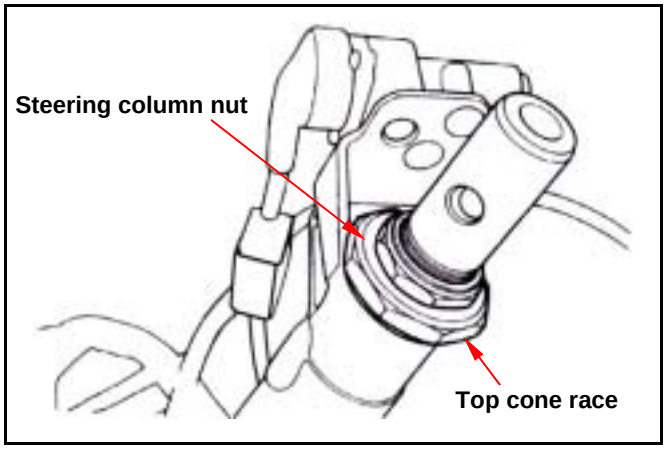

With a plastic hammer tap the steering column slightly, and then remove the top ball bearing seat. Remove the lower-end cone bearing seat on the frame with a punch.

Caution

- Do not damage the frame and the steering column.

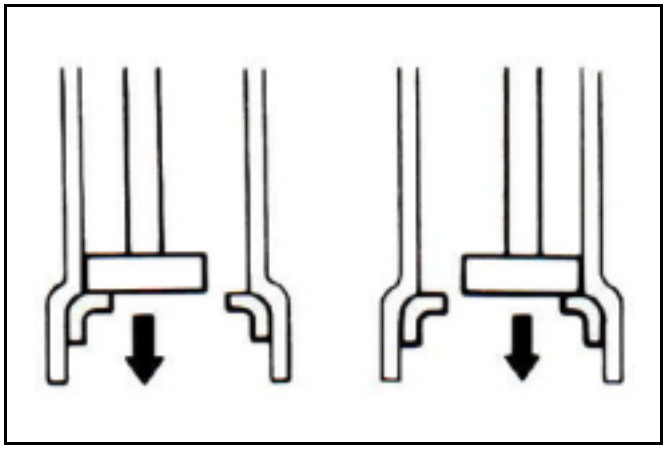

Installation

Install a new top-cone bearing seat onto the top of steering column.
And then, push the lower-cone bearing seat from bottom until to locking position.

Caution

- Do not let the ball bearing in tilt motion as installation.

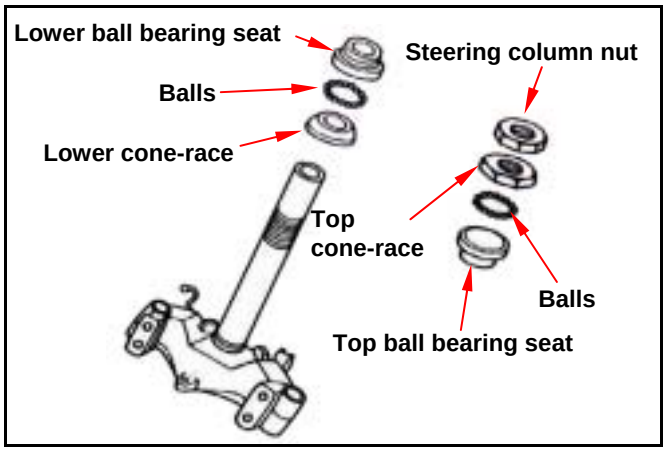

Apply with some grease onto the top & bottom bearing balls, and then install the balls into bearing seat.
Press in a new lower cone-race onto the steering column, and lubricate it with grease.
Install the steering column.
Lubricate the top-cone race with grease.
Drive the cone-race into the steering column until contact with the top bearing seat no clearance.
Note, return 1/2 turn and then tighten the top cone race to specified torque. (tighten the race around 1/4~3/8 turn more.)

Torque value: 0.2~0.3kgf-m

Caution

- Do not tighten the top cone race too tight to prevent from damage the ball bearing seat when tightening the top cone race.

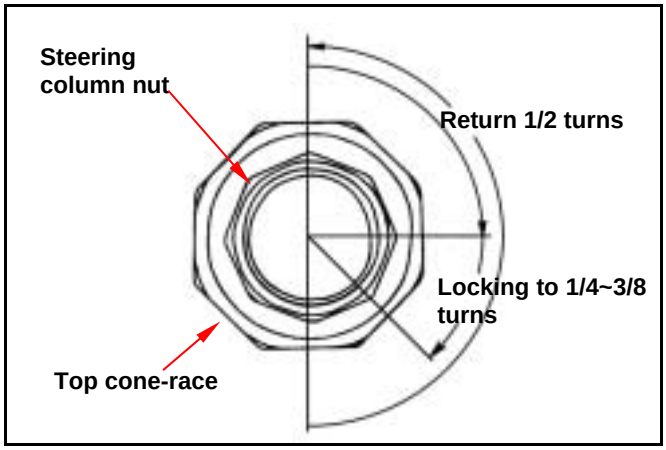

Install the steering column nut and lock the top cone race. Then, tighten the nut.

Torque value: 1.0~2.0kgf-m

Install the bearing seat according to the reverse procedure of removal.

Caution

- Check the steering column if it can be turned freely and no clearance in vertical motion.

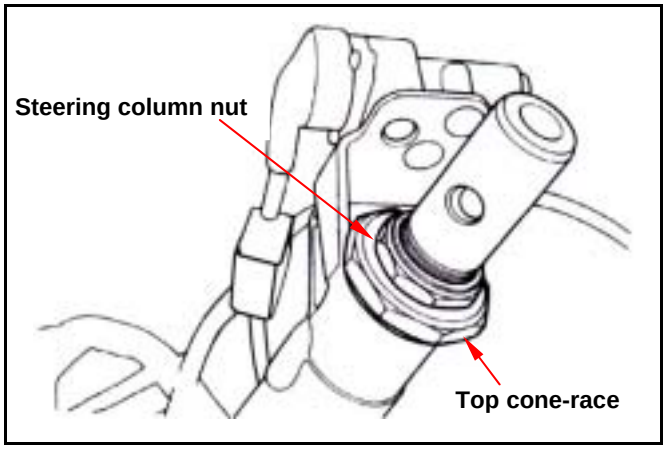

Note:

Mechanism Diagram ····· 15-1	Exhaust Muffler ····· 15-3
Operational Precautions ····· 15-2	Rear Wheel ····· 15-3
Trouble Diagnosis ····· 15-2	Rear Cushion ····· 15-4

Mechanism Diagram

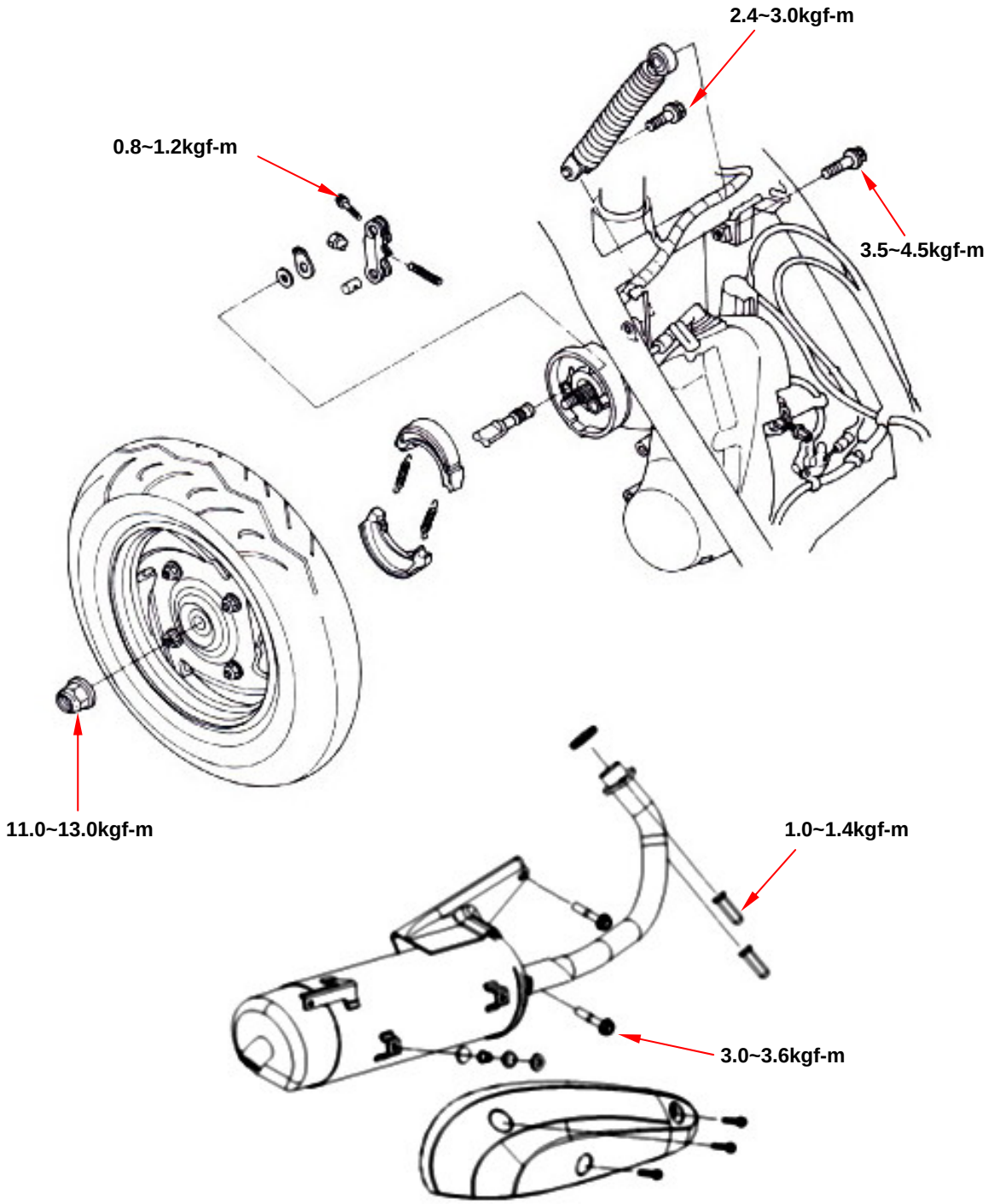

Operational Precautions

General information

As for the wheel removal, service, and installation procedures, please refers to the service manual of high speed tire.

Specification

Unit: mm

Items		Standard (mm)	Limit (mm)
Wheel wobbling	Radial	-	2.0
	Axial	-	2.0
Thickness of rear brake lining		4.0	2.0

Torque values:

Rear wheel axle nut	11.0~13.0kgf-m
Rear cushion upper mount bolt	3.5~4.5kgf-m
Rear cushion lower mount bolt	2.4~3.0kgf-m
Exhaust muffler connection nut	1.0~1.4kgf-m
Exhaust muffler mounting bolt	3.0~3.6kgf-m

Trouble Diagnosis

Rear wheel wobbling

- Bend wheel rim
- Poor tire
- Loosen wheel shaft

Cushion too soft

- insufficient cushion spring force

Braking Noise

- Worn brake lining
- Brake drum deformation
- Improperly brake panel installation
- Unparalleled brake drum or wheel unparallel.

Poor brake performance

- Poor brake adjustment
- Contaminated brake lining
- Worn brake lining
- Greased brake drum
- Contaminated and seized brake cable
- Improperly installation of brake cable

Exhaust Muffler

Removal

Remove the front-end nut of the exhaust muffler. (2 nuts)
Remove the bolts. (2 bolts)
Remove the exhaust muffler.

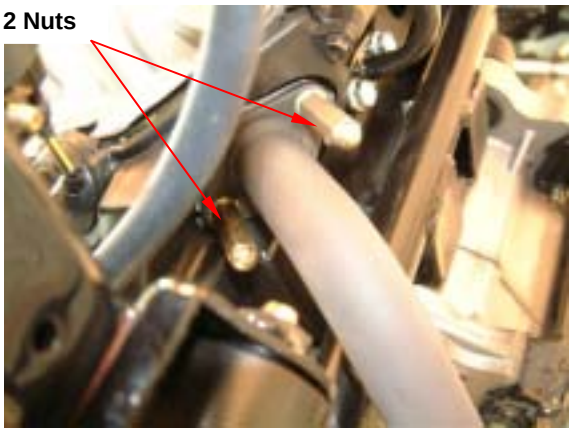

Installation

Install the exhaust muffler according to the reverse procedure of removal.

Caution

- Replace the exhaust muffler gasket if it is broken or deformed. Before tightening the exhaust bolts, it has to tighten the exhaust nuts firstly.

Torque value:

Exhaust muffler connection bolt	**3.0~3.6kgf-m**
Exhaust muffler mounting nut	**1.0~1.4kgf-m**

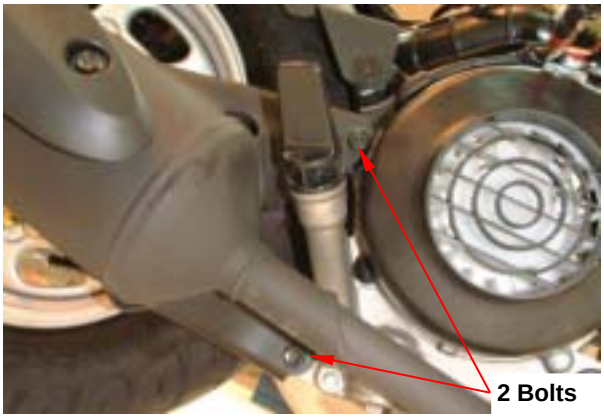

Rear Wheel

Inspection

Measure wobbling of the wheel rim.
Service limit:
Radial: 2.0mm
Axial: 2.0mm
If the wheel rim wobbling out of the specification, except resulted from the wheel rim deformation, it might be loosen or worn final driving shaft bearing or bend, deformed driving shaft.

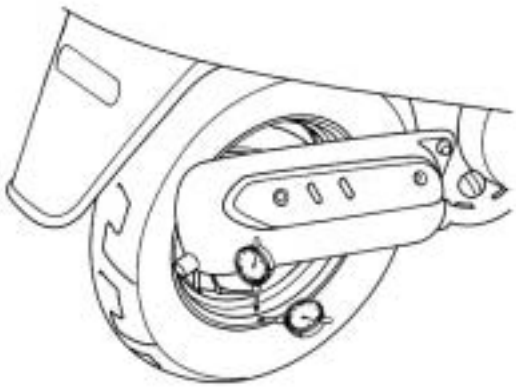

Removal

Remove the exhaust pipe (2 bolts, 2 nuts)
Remove the rear wheel (1 wheel axle nut, 1 washer)

Installation

Install the rear wheel according to the reverse procedure of removal.
Torque value: rear wheel nut 11.0~13.0kgf-m

Rear Cushion

Removal

Remove the left & right side covers. (2 screws)
Remove the luggage box. (4 bolts)
Remove the rear carrier. (2 bolts, 2 nuts)
Remove the body cover (4 screws)
Remove the air cleaner bolts (2 bolts)
Remove the lower nut of the rear cushion (1 bolt)
Remove the upper nut of the rear cushion (1 bolt)
Remove the rear cushion.

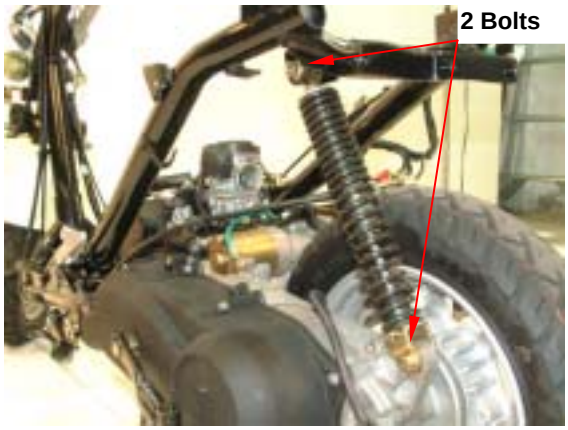

Installation

Install the rear cushion according to the reverse procedure of removal.

Caution

- The rear cushion has to be replaced with one set and can not be replaced by unauthorized persons. Otherwise, it might damage the rubber bushing and construction.

Torque values

Rear cushion lower mount bolt	**2.4~3.0kgf-m**
Rear cushion upper mount bolt	**3.5~4.5kgf-m**

Mechanism Diagram ····· 16-1
Operational Precautions ····· 16-2
Specification ····· 16-3
Trouble Diagnosis ····· 16-4
Charging System ····· 16-5
Ignition System ····· 16-11
Start System ····· 16-15
Meter ····· 16-16
Light / Bulb ····· 16-18
Switch / Horn ····· 16-22
Fuel Unit ····· 16-25

Mechanism Diagram

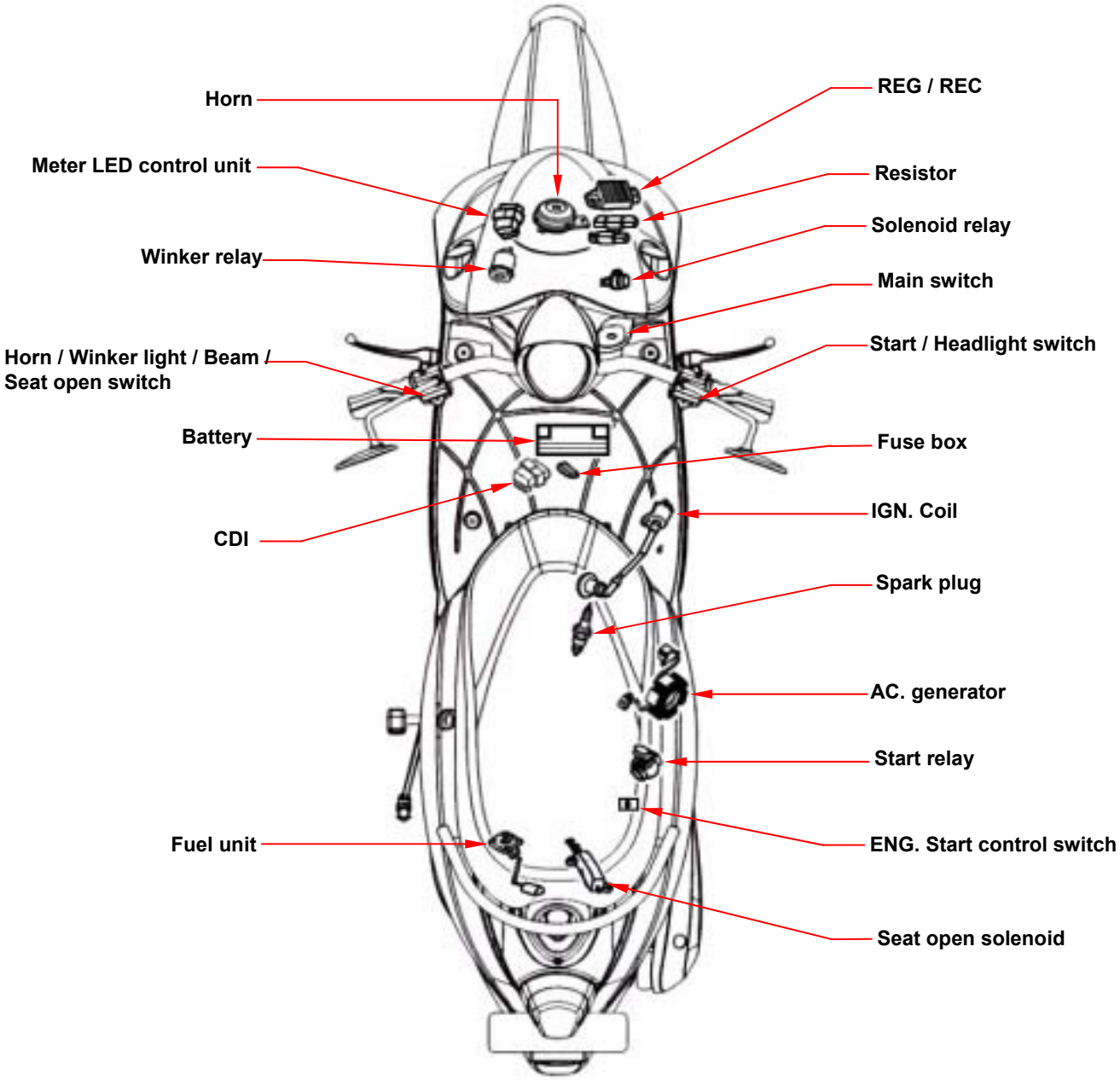

Operational Precautions

Charging System

- When remove the battery, the disconnection sequence of cable terminals shall be strictly observed. (First disconnect the negative cable terminal, next, the positive cable terminal.)
- MF (Maintenance Free) battery does not need to check, add electrolyte or distilled water.
- Battery must be taken out from scooter when charging the battery. But do not open the battery caps.
- Do not quick charge the battery unless in emergency.
- A voltmeter must be used when checking battery charging condition.
- Battery can be charged or discharged alternately. To set a discharged battery idle for a prolonged period will shorten its service life and reduce its capacity. Usually, battery's capacity will reduce after 1~2 years. After low capacity battery was charged, its voltage will increase. If it connects to an additional load, the voltage will reduce suddenly, and then go up again.
- Over-charged battery. Usually, the over-charged battery can be seen externally. If a short circuit occurred inside the battery, there will be no voltage on the terminals of battery if voltage regulator does not operate. Then, the battery's voltage will be too high that may reduce battery's life.
- The battery will be self-discharged if it was set idle for a long time. An idle battery must be charged about every 2months.
- A new battery filled with electrolyte will generate a voltage after filled out electrolyte. The voltage should be in 12.5V or more after 10 minutes. When electrolyte is not enough, the battery must be filled with electrolyte and then charged to prolong the battery's life-span.
- Please check electrical device according to the procedure of diagnosis chart.
- Do not disconnect and connect the coupler of electrical devices when current is passing these devices because this will generate high voltage and the electrical components in the voltage-current regulator will be damaged. The ignition switch must be turned OFF before performing any work.
- Please do not replace with traditional type battery as replacement.
- Please refer to the removal instruction when removing the alternator and the pulse generator.

Ignition System

- Please follow the procedure of trouble diagnosis chart to check ignition system.
- The ignition system equipped with a auto-advanced timing device in CDI unit. Thus, ignition timing need not to be adjusted. In case of incorrect ignition timing occurred, check the CDI unit or alternator system. It has to check the ignition timing with the ignition timing lamp if replaced these components.
- Do not hang or impact the CDI unit of ignition system because the major faulty of CDI unit is caused by impact. Therefore, take care when disassembling.
- Most of ignition system problems were resulted from poor connecting coupler. Please check the couplers first when servicing.
- Make sure that the heat range of spark plug is suitable. Improper spark plug is the main cause of poor engine operation or combustion.
- Inspection procedures in this manual are based on Max. voltage. This manual also contains methods of how to check ignition coil resistance and component operation.
- Please follow the continuity chart to check ignition switch.

Starting System

- As to the ignition system inspection, please follow the Trouble Diagnosis procedure to check.
- Starting motor can be removed directly from engine.
- Please refer to chapter 10 for starting clutch removal procedures.

Specification

Charging System

Items			Specification	
			HU10U/W	HU05U
Battery	Capacity/type		12V4Ah / YTX5L-BS or GTX5L-BS	
	Charging rate		STD: 0.4A/5~10hrs, emergency charging: 4A/0.5hrs	
	Voltage (20°C)	Full charged	13.0~13.2V	
		Under charged	12.3V	
Alternator	Capacity		14V / 3A	
	Lighting coil resistance (20°C)		Between yellow-white: 0.1~0.8Ω	0.531Ω±20%
	Charging coil resistance (20°C)		Between white-green: 0.2~1.0Ω	0.722Ω±20%
Leaking current			Less 1mA	
RPM for starting charging			1800rpm(headlamp ON)	2000rpm(headlamp ON)
Voltage controlled by regulator			13.8±0.5V	13.5±0.5V
Resistor	Resistance (20°C) 20W5.9Ω		30W 5.9Ω±10%	30W 5.9Ω±10%
	Resistance (20°C) 5W5Ω		5W 10.2Ω±10%	5W 12Ω±10%

Ignition System

Item		Specification	
		HU10U/W	HU05U
Spark plug	Standard	NGK C6HSA (Recommended)	
	Hot type	———	
	Cold type	———	
	Spark plug gap	0.6~0.7 mm	
Ignition coil resistance	Primary	0.21±10%Ω	0.31Ω±15%
	Secondary (Without plug cap)	3~5 KΩ	4.0 KΩ±15%
Ignition timing	"F" Mark	13° BTDC/1700 rpm	
	Full Advanced degree	13° ° BTDC/2400 rpm	
		22° BTDC/4000 rpm	26° BTDC/8000 rpm
Pulse generator resistance (20°C)		50~200Ω	115Ω±20%
Exciting coil resistance (20°C)		400~800Ω	602Ω±20%
Ignition coil-primary max. voltage		95~400 V	
Pulse generator voltage		Above 1.7 V	

Starting System

Item		Specification
Starting motor	type	DC TYPE
	capacity	0.25 KW

Trouble Diagnosis

Charging System

No power supply

- Dead battery
- Disconnect battery cable
- Fuse burned out
- Faulty main switch

Low voltage

- Weak battery
- Loose battery connection
- Charging system failure
- Voltage-current regulator failure

Intermittent power supply

- Loose charging system cables
- Loose battery cables
- Poor connection or shorted circuit in discharging system
- Poor connection or shorted circuit in charging system

Charging system failure

- The fuse is blown
- Loose, broken or shorted wire or wire connection
- Faulty voltage-current regulator
- Faulty alternator

Starting System

Starter motor does not work

- The fuse is blown
- The battery is not fully charge
- Poor main switch
- Poor starter switch
- The front and rear brake switches do not operate correctly
- Starter relay is out of work
- The ignition coil is poorly connected, open or short-circuited
- The starter motor is out of work

Weak starter motor

- Poor charging system
- The battery is not fully charged
- Poor connection in the windings
- The motor gear is jammed by foreign material

Starter motor is working, but engine does not crank

- Poor starter motor pinion
- Poor starter clutch
- The starter motor run in reverse direction
- Poor battery

Ignition System

No spark produced by spark plug

- The spark plug is out of work
- The cable is poorly connected, open or short-circuited
  - Between alternator and C.D.I.
  - Between CDI and ignition coil.
  - Between CDI and main switch
- Poor main switch
- Poor C.D.I.
- alternator is out of work

Engine does not crank smoothly

- Primary coil circuit
  - Poor ignition coil
  - Poor connection of cable and couplers
  - Poor main switch
- Secondary coil circuit
  - Poor ignition coil
  - Poor spark plug
  - Poor high-tension cable
  - Current leakage in the spark plug cap
- Incorrect ignition timing
  - Poor alternator
  - Improper installation of the pulse sensor
  - Poor C.D.I.

Charging System

Wire Diagram

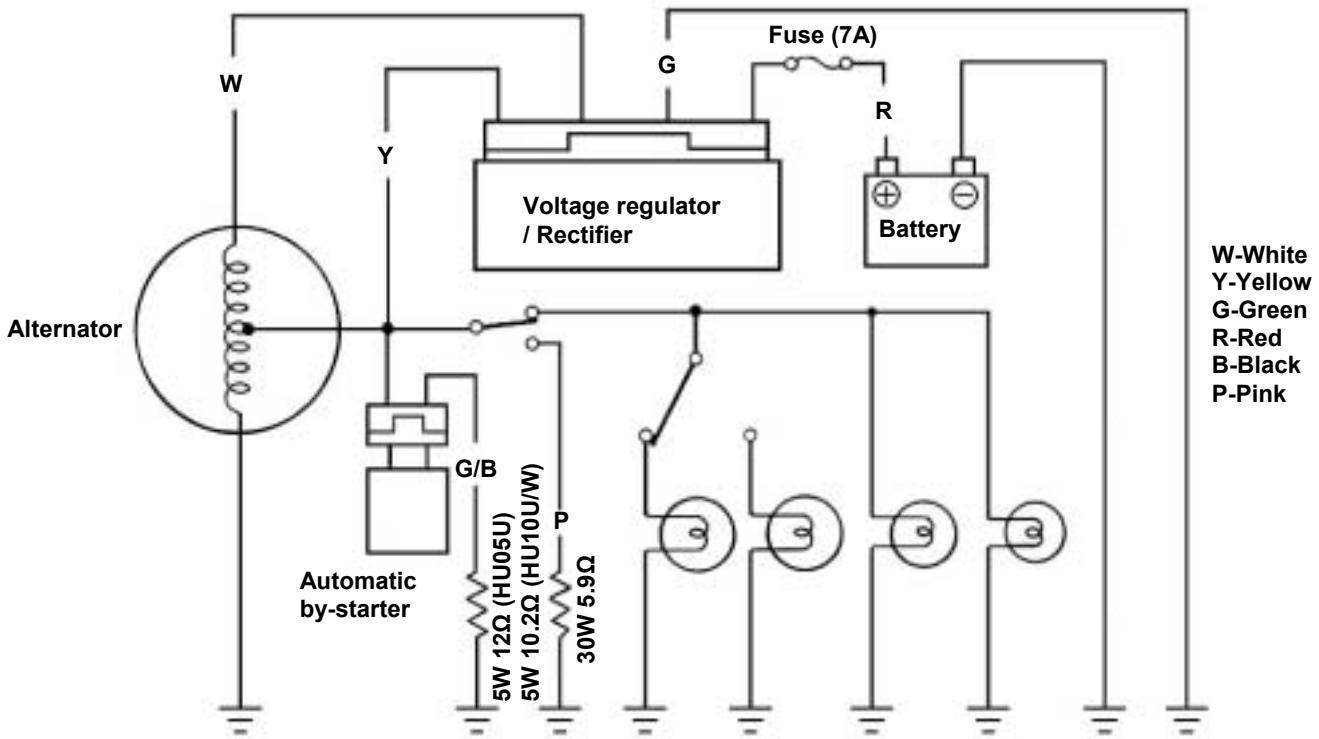

Current Leakage Inspection

Turn the main switch to OFF position, and remove the negative cable terminal (-) from the battery. Connect an ammeter between the negative cable terminal and the battery negative terminal (as shown on left diagram).

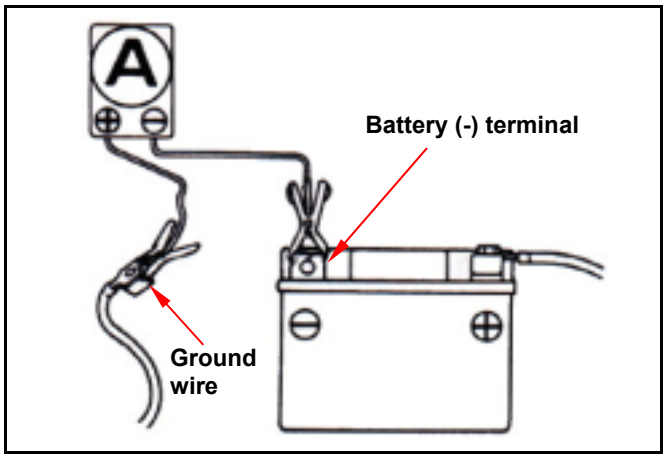

Caution

- In the current leakage test, set the current range at larger scale, then gradually decrease to the lower scale as the test process goes to avoid possible damage to the ammeter and the fuse.
- Do not turn the main switch to ON position during test.

If the leaked current exceeds the specified value, it may indicate a short-circuit.

Allowable current leakage: Less than 1mA

Disconnect each cable one by one and take measurement of the current of each cable to locate the short circuit.

BATTERY

Removal

Remove the battery cover (2 screws)

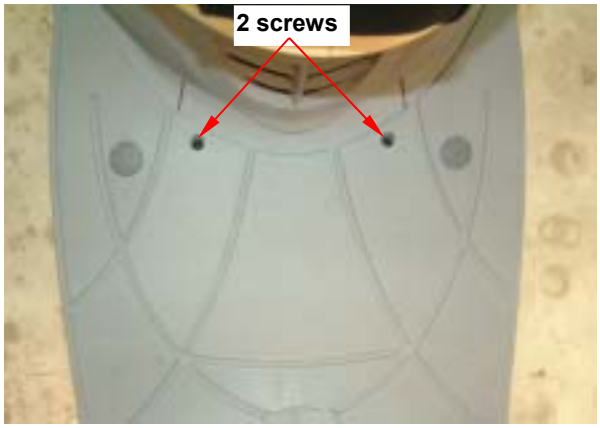

Caution

- Electrolyte (diluted sulfuric acid) is very toxic. Once it spreading on clothes, skin, or eyes, it will cause burned or blind. In case of being spread, flush with great quantity of water immediately, and then send to hospital.
- When clothes are spread by electrolyte, it will contact with skin. So, it must flush with great quantity water to take off the clothes.

Disconnect the negative (-) cable from the battery first, then the positive (+) cable.
Remove the battery.

Install the battery in reverse order of removal.

Caution

- To prevent from circuit short, connect positive (+) terminal at first, and next negative (-) terminal.

Voltage Check
With a digital voltage meter or multi-meter to measure battery voltage.
Voltage:
Fully charged: 13.0 ~ 13.2V (at 20°C)
Undercharged: Below 12.3 V (at 20°C)

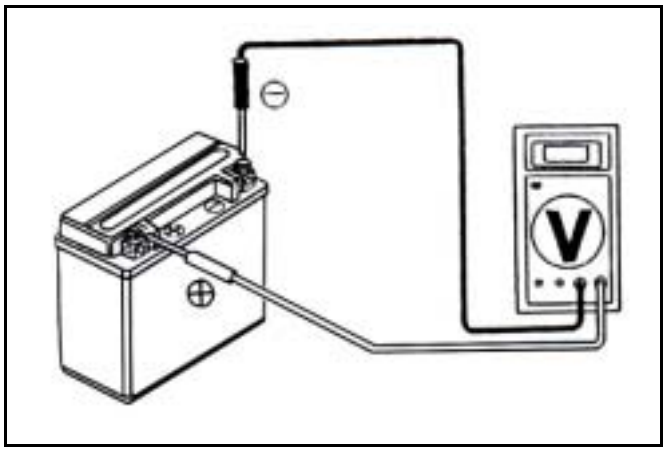

CHARGING
Connect the Charger positive (+) to the battery positive (+) terminal.
Connect the Charger negative (-) to the battery negative (-) terminal.

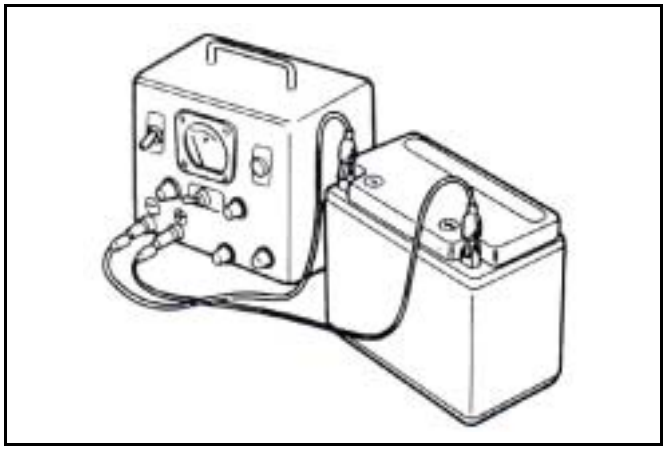

	Standard	Max.
Charging current	0.4A	4.0A
Charging time	5~10H	1H

Caution

- Strictly keep flames away from a charging battery.
- The charging ON/OFF is controlled by the charger's switch. Do not control the charging by battery jump wires.
- Turn the charger's switch OFF at first before or after charging to prevent from sparks created on the couplers and explosion.
- To charge a battery must be based on the battery's ampere-hour shown on label.

Caution

- Quick charge a battery should be used only in an emergency.
- Make sure the current and charging time of above description.
- The battery will be damaged by too much current or too rush charging.
- When finishing charge, it is necessary to measure voltage after 30 minutes.

After installing the battery, coat the terminals with clean grease.

Charging Voltage/Current Inspection

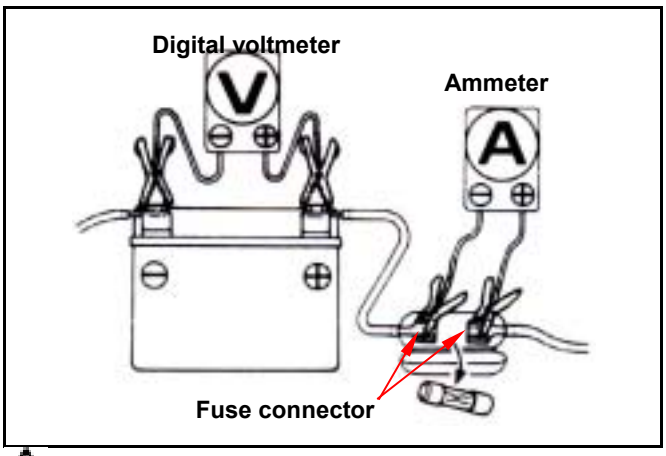

Caution

- Before conducting the inspection, be sure that the battery is fully charged. Use a fully charged battery having a voltage larger than 13.0 V. If undercharged, the current may change dramatically.
- While starting the engine, the starter motor draws large amount of current from the battery. Thus, do not start the engine with battery.

After the engine is warmed up, replace original battery with a fully charged battery.
Connect a digital voltmeter to the battery terminals.
Connect an ammeter between both ends of the main fuse.

Caution

- When the probe is reversibly connected, use a voltmeter having an indication that the current flows from the positive or the negative direction and the measurement should be at zero, ammeter at one direction only.

Caution

- Do not uses short-circuit cable.
- It is possible to measure the current by connecting an ammeter between the battery positive terminal and the cable position terminal, however, while the starter motor is activated; the surge current of the motor draws from the battery may damage the ammeter. Use the foot lever to start the engine.
- The main switch shall be turned to OFF position during the process of inspection. Never tamper with the ammeter and the cable while there is current flowing through. It may damage the ammeter.

Connect a tachometer.
Turn on the headlamp to high beam and start the engine.
Accelerate the engine gradually to the specified revolution per minute and measure the charging voltage/current.

Specified Charging Current:

(Headlamp OFF)	**0.6A or more / 2500rpm**
	1.2 A or more / 6000 rpm
(Headlamp ON)	**0.4A or more/2500rpm**
	1.0 A or more / 6000 rpm

Control Charging Voltage:

HU10U/W	**13.5±0.5V / 1800 rpm**
HU05U	**13.8±0.5V / 2000 rpm**

Caution

- To replace the old battery, use a new battery with the same current and voltage.

The following problems are related to the charging system; follow the instructions provided in the checking list to correct it if any one of the problems takes place.

(1) The charging voltage can not exceed the voltage between two battery terminals and the charging current is in the discharging direction.
(2) The charging voltage and current are too much higher than the standard values.

The following problems are not related to the charging system; correct it if any by following steps indicate in the checking list.

(1) The standard charging voltage and current can only reach when the revolution of the engine exceeds the specified rpm.
   - Bulbs used exceed their specified watt and consume too much power.
   - The replacement battery is aged and does not have enough capacity.
(2) The charging voltage is normal, but the current is not.
   - The replacement battery is aged and does not have enough capacity.
   - Battery does not have enough electricity or is over charged.
   - The fuse of the ammeter is blown.
   - The ammeter is improperly connected.
(3) The charging current is normal, but the voltage is not.
   - The fuse of the voltmeter is blown.

Voltage Regulator Inspection

Remove the front fender. (4 screws)
Disconnect the 4P coupler on the diode, and check the continuity between main wire terminals according to following method.

Main wire circuit inspection

Item (wire color)	Judgment
Check voltage between battery terminal (red) and ground.	Battery voltage
Check continuity between ground (green) and frame.	Continuity
Check illumination wire (yellow) to ground. (Disconnect the coupler of the resistor's pin and automatic by-starter pin. Illumination switch is in OFF)	Continuity & resistance
Check charging coil (white) to (ground)	Continuity & resistance

If the measured value is abnormal, check the abnormal wire circuit. If components are good, it could be a poor wire circuit.
If all items are in good condition, then replace the voltage regulator.

If main wire circuit check is in normal and there is no loose in the pins of voltage regulator coupler, then measure the resistance between the coupler of voltage regulator.

Voltage Regulator Check **Unit: KΩ**

Multi-meter (+) / Multi-meter (-)	White (W)	Yellow (Y)	Red (R)	Green (G)
White (W)		∞	4~7	∞
Yellow (Y)	∞			2.4~48
Red (R)	∞	∞		∞
Green (G)	∞	2.4~48	∞	

If the resistance values are abnormal among the pins, replace the voltage regulator.

Caution

- Do not touch the probe of multi-meter by fingers, then the resistance values will be incorrect because there is some resistance existence in human body.
- To use the multi-meter recommended by SYM. Otherwise, the measured resistance might be different.

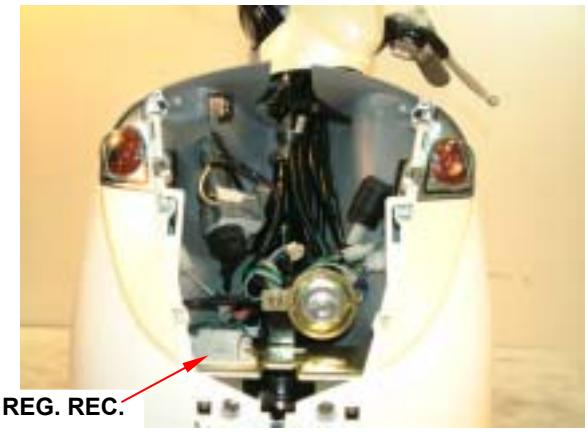

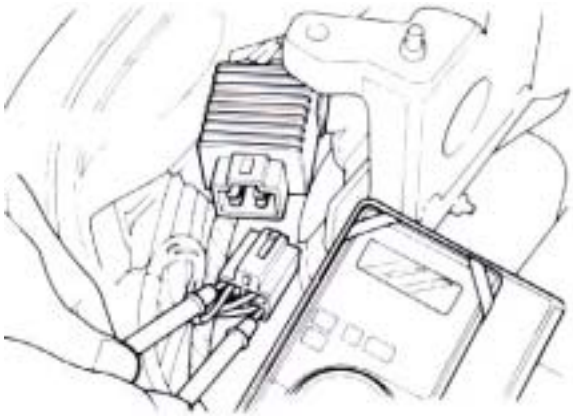

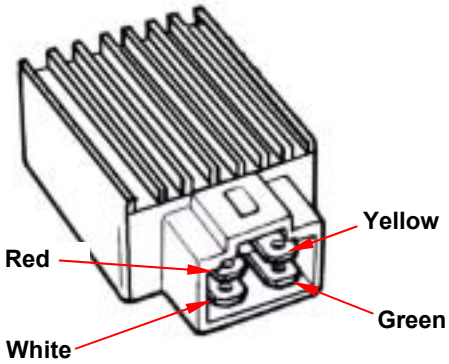

Alternator charging coil

Caution

- The check of alternator charging coil and illumination coil can be done when the alternator is mounted on engine.

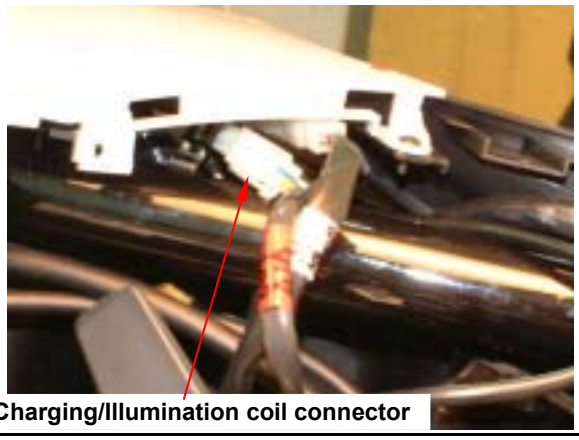

Check

Remove the 4P coupler of the alternator.
Measure the resistance between the white wire on the alternator and frame ground with a multi-meter.
Standard value: 0.2-1.0Ω
Replace the alternator charging coil if the measured value exceeds standard.

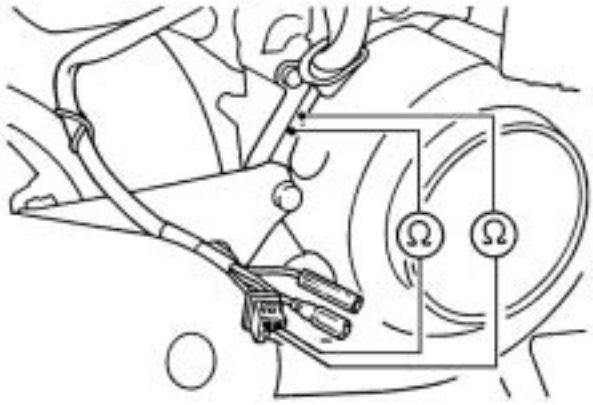

Alternator lighting coil

Check

Remove the 4P coupler of the alternator.
Measure the resistance between the yellow wire on the alternator and frame ground by multi-meter.
Standard value: 0.1-0.8Ω

Resistor check

Remove the front cover.
Measure the resistance between the resistor wire (pink & green/black) and frame ground.

Standard:		**30W/5.9Ω±10% (pink)**
	HU10U/W	**5W/10.2Ω±10% (green/black)**
	HU05U	**5W/12Ω±10% (green/black)**

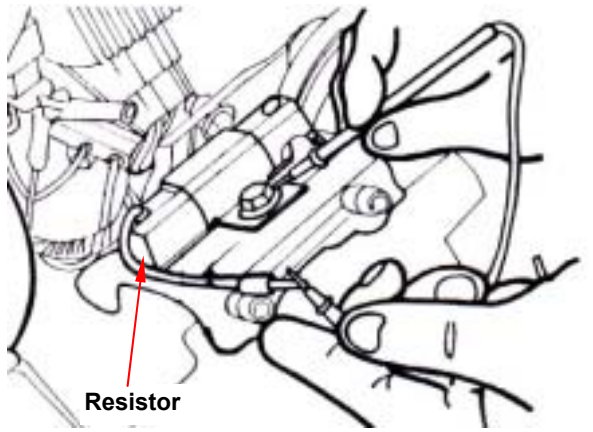

Ignition System

Ignition System Circuit

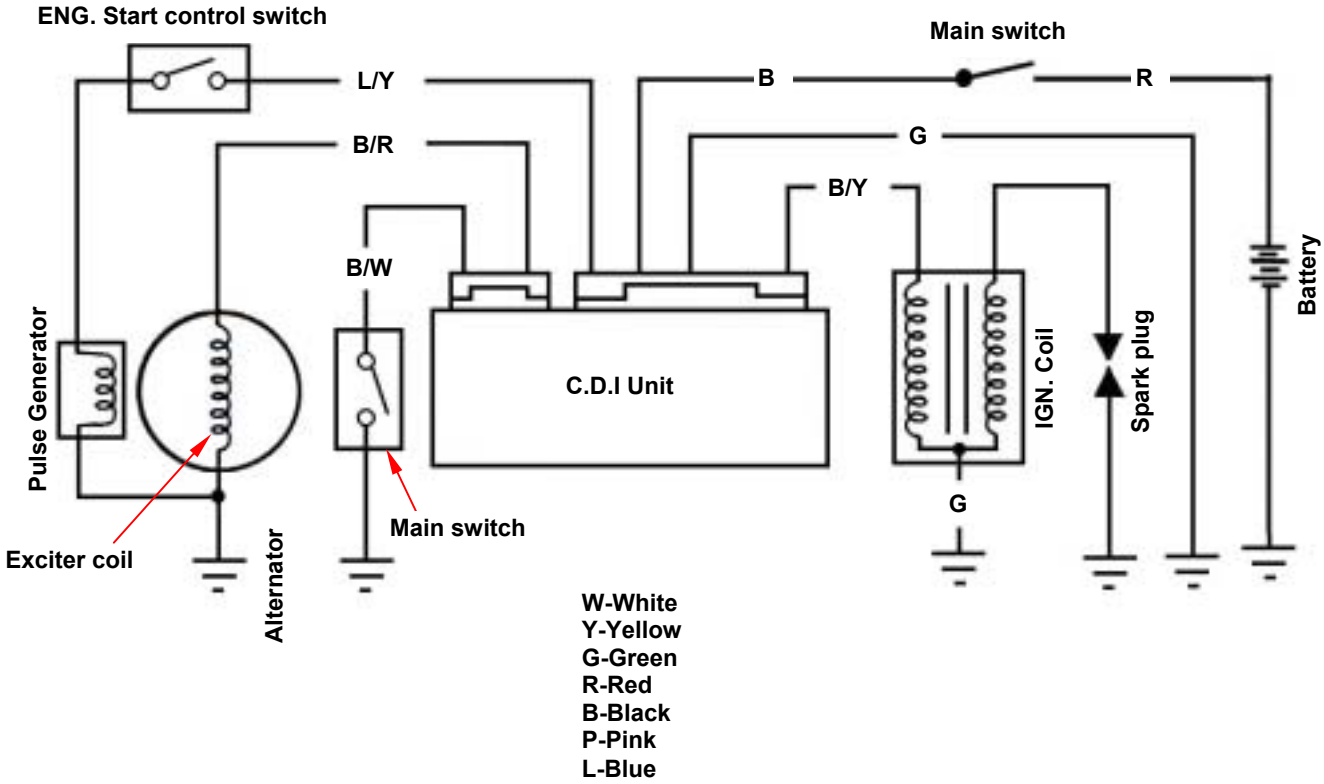

CDI. Unit

Removal

Remove the battery cover.
Remove the CDI.

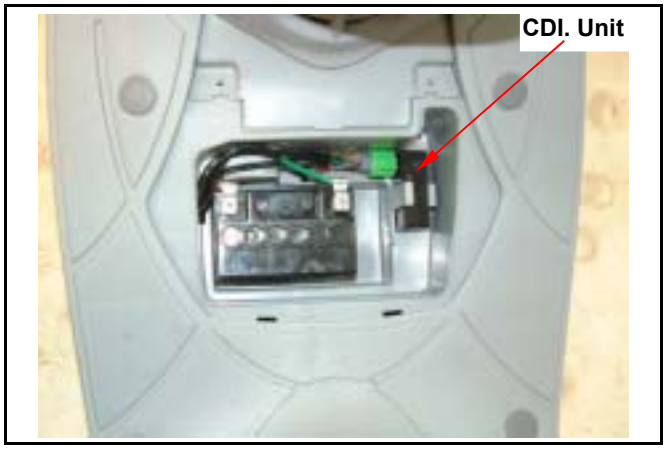

Inspection

Disconnect the coupler from the CDI unit.
Make the following inspection at each terminal of the harness side coupler.

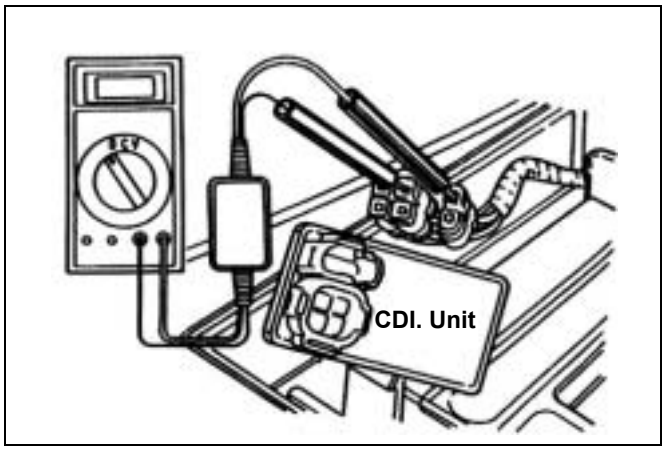

ITEM		Measure at:	Standard (at 20°C)	
			HU10U/W	HU05U
Main Switch		Black/white-green	Continuity as main switch OFF	
Main Switch		Black/ Blue -green	Continuity (battery voltage) as master switch ON	
Exciter Coil		Black/Red-Green	400 ~800Ω	115Ω±20%
Pulse Generator		Blue/Yellow-green	50 ~200Ω	602Ω±20%
Ignition Coil	Primary	Black/yellow-green	0.21Ω±10%	0.31Ω±15%
	Secondary	Green-high voltage cable -w/o Cap	3~5KΩ	4.0 KΩ±15%
		Green-high voltage cable - w/ Cap	7~12KΩ	

Ignition coil

Removal

Remove the luggage box, body cover and floor panel.
Remove spark plug cap.
Remove the primary coil wire of ignition coil.
Remove the fix screws for the ignition coil, and remove the coil.
Install the coil in reverse order of removal.

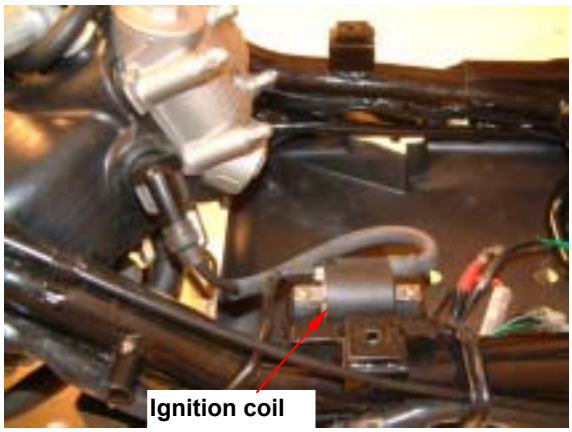

Caution

- Install primary coil with black/yellow lead connected to black coupler and green lead connected to green coupler.

Spark plug confirmation

Remove the spark plug and install a good plug into plug cap, and then ground it to engine ground.
Make sure its spark condition. If it is in not good or burnt spark plug, replace the spark plug with new one.

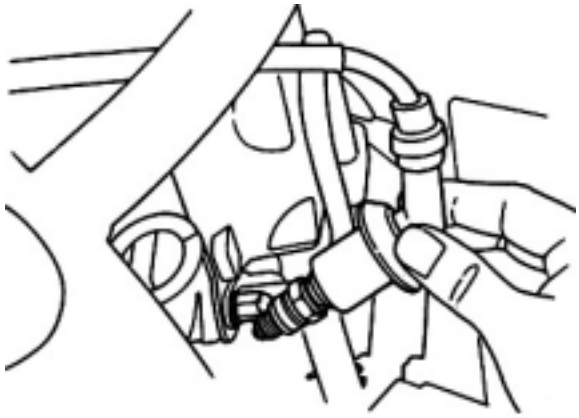

Caution

- Make sure each wire connection is correct, and test as required. Even the wire connection is in correct, sometimes; it might not be tested occurred.

Connect the high voltage shunt with a multi-meter or input a resistor in the 10MΩ 10CV of voltage meter.
Remove the central cover.
Connect ignition coil wires, and connect a shunt between primary terminal (black/yellow and green) and frame ground.
Press the starting motor button, or starting lever to test the max. primary voltage of ignition coil.
Connection: connect (+) terminal to green side, and (-) to black/yellow side.
Min. voltage: Above 95 V.

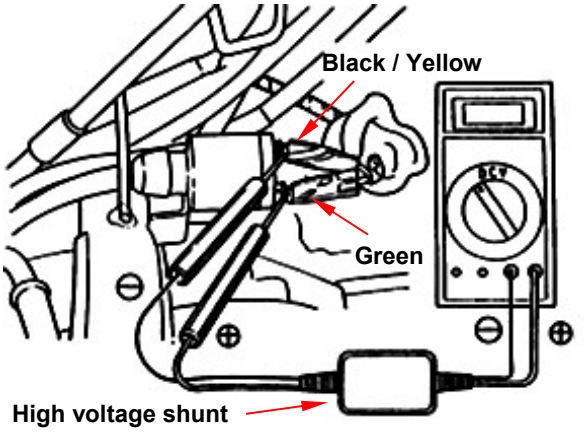

Caution

- Do not touch metal parts on the test probe with fingers to avoid electric shock.

Primary coil check

Disconnect the primary coil coupler and check the resistance between primary coil terminals.

Standard: HU10U/W 0.21Ω± 10 % (at 20℃)
HU05U 4.0 KΩ±15% (at 20℃)

Primary coil is good if resistance within standard.
Primary coil is broken if resistance is infinite.
Replace the coil.

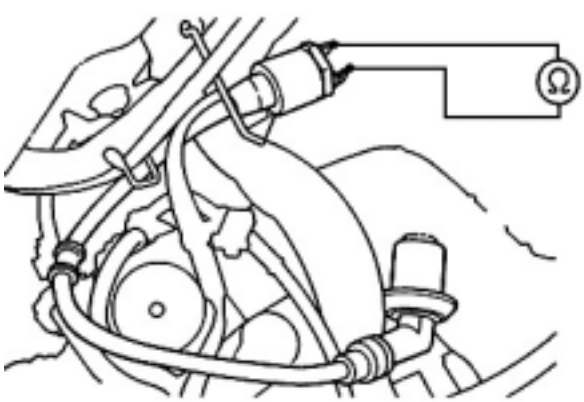

Secondary coil

Attached the spark plug cap, measure the resistance between plug cap side and green terminal.

Standard value: 7~12kΩ (20°C)

Remove the spark plug cap, measure the resistance between plug cap side and green terminal.

Standard value: HU10U/W 3~5KΩ±10% (20°C)
HU05U 4.0KΩ±15% (20°C)

Secondary coil is good if resistance within standard.

Secondary coil is broken if resistance is infinite. If the spark plug cap attached and the measured value exceeds standard value, it means the spark plug cap is in not good.

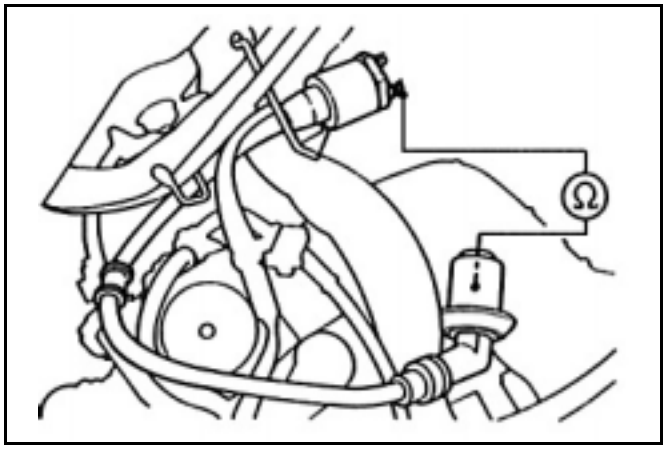

Replacement

Remove the ignition coil bolt (2 screws) to replace the ignition coil if necessary.

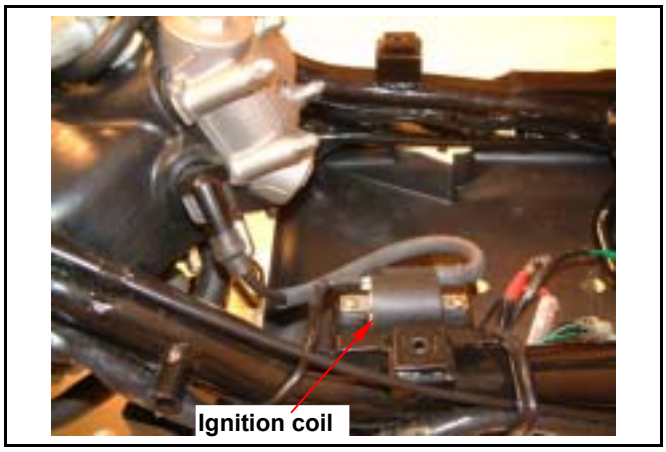

Pulse Generator

Caution

- Checking pulse generator can be done on engine. But, the spark plug must be installed onto the cylinder head, and cylinder compression pressure must be in normal condition.

Check

Remove body cover.

Remove the pulse generator coupler.

Measure the resistance between blue/yellow terminal on engine side and frame ground.

Standard: HU10U/W 50~200Ω (20°C)
HU05U 115Ω±20% (20°C)

Replace the alternator if the measured value exceeds standard value.

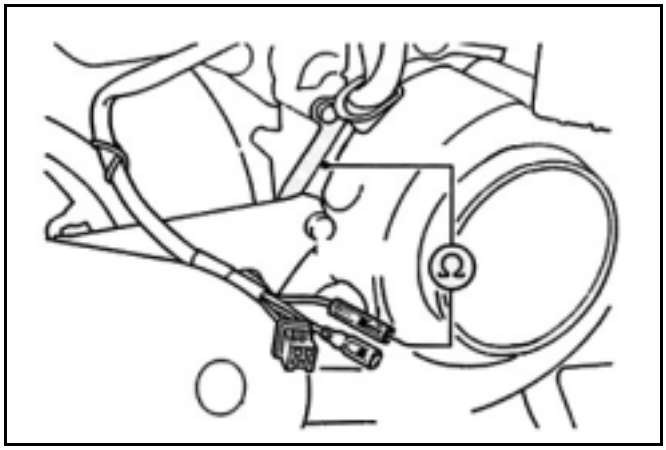

Exciting coil

Remove the exciting coil coupler.

Measure the resistance between black/red wire on engine side and frame ground.

Standard: HU10U/W 400~800Ω (20°C)
HU05U 602Ω±20%

Replace the alternator if the measured value exceeds the standard value.

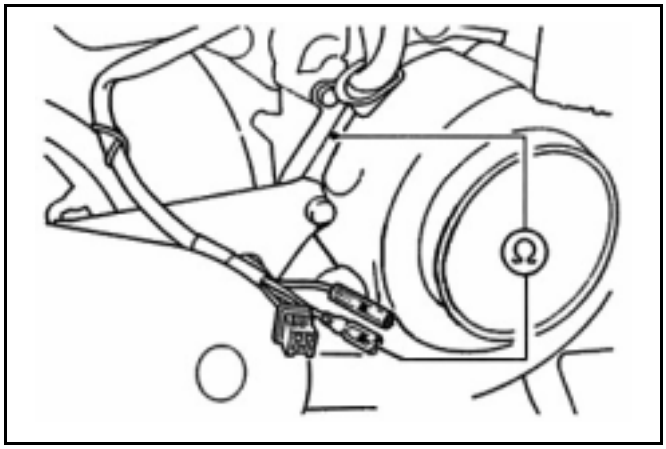

Start System

Start Circuit

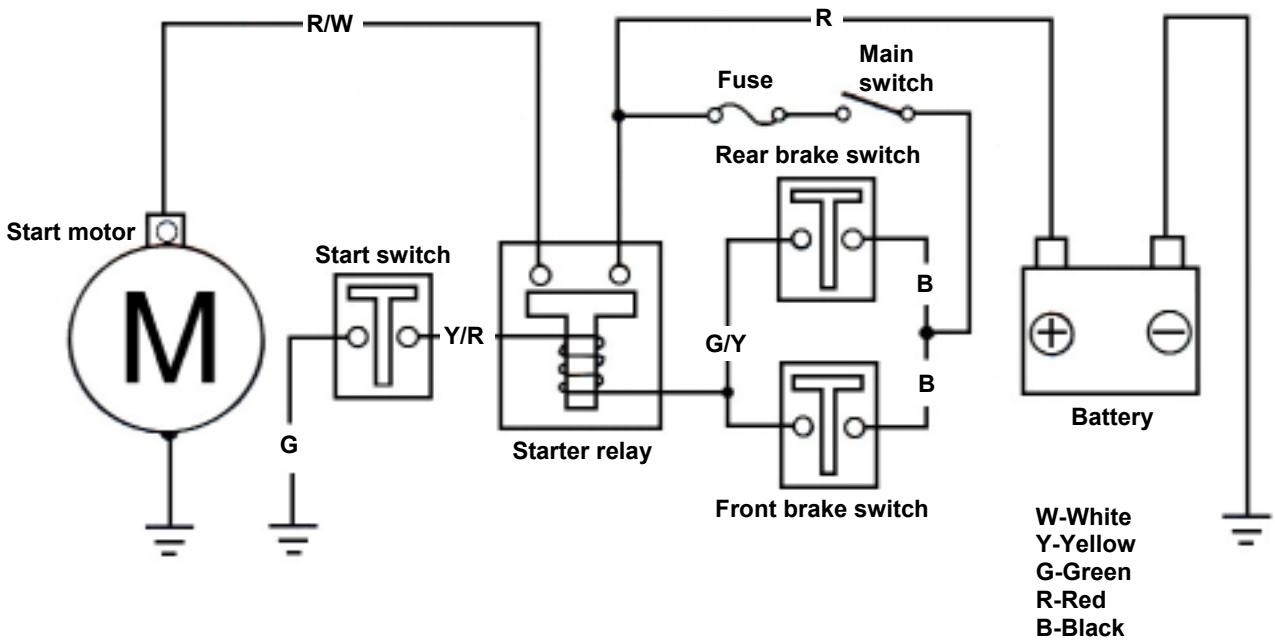

Start relay inspection

Turn main switch ON.
Operate the brake lever.
Press start button.
If there a click sound, the start circuit is normal.

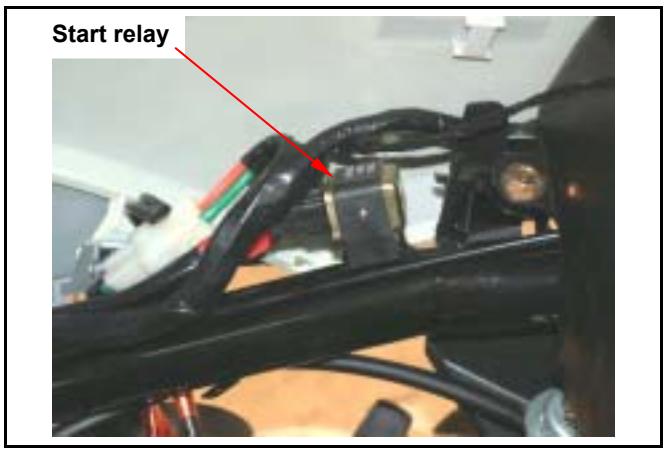

Remove the luggage box assembly.
Disconnect the battery negative (-) terminal.
Remove the battery positive (+) connection and start motor wires from the start relay large pin.
Remove the power control coupler of the start relay.
Connect an Ohmmeter between the start relay large pins.
Connect the green/yellow wire to battery positive (+) terminal, and yellow/red to battery negative (-) terminal.
Check the continuity between the start relay large pins. If it is not continuity, then replace the start relay.

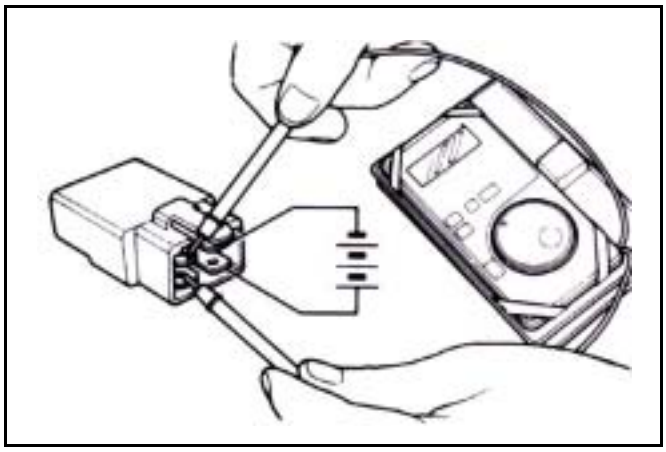

Start Motor Removal

Remove the right side cover. (1 screw)
Remove the air cleaner mounting bolts. (2 bolts)
Firstly, remove the battery negative (-) terminal, and then remove the positive (+) terminal.
Remove the luggage box.
Remove the start motor power wire.
Remove the start motor mounting bolts and motor. (2 bolts)

Starting Motor Installation

Install the motor in reverse order of removal.

Meter

Removal

Remove the handle front cover.

Remove front cover.
Remove the cable coupler of the meter.

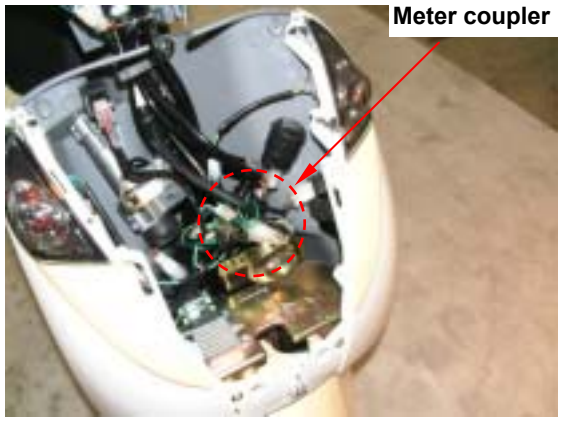

Remove speedometer cable.

Remove handle rear cover and meter set (2 bolts & 1 screw).

Remove meter mounting screws (3 screws), and then remove meter.

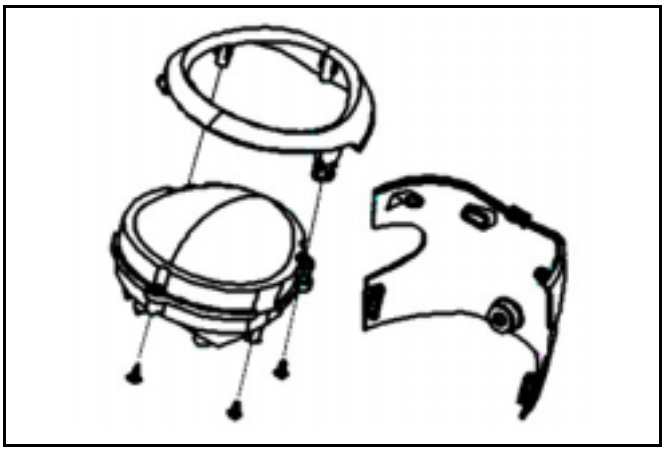

Starting Motor Installation

Install the meter in reverse order of removal.

Light / Bulb

Headlight Bulb Replacement

Remove the front cover (3 screws)
Disconnect the headlight wire coupler.

Remove the rubber boot.

Press down the bulb spring locker and then remove the locker with turning it left motion.
Remove the bulb.
Replace the bulb with new one if necessary. (12V 30W/30W)

Caution

- Do not touch the bulb surface with fingers because the bulb will create hot-spot so that let it be burnt. It has to be package with cloth or wear glove as installing.
- Wipe the bulb with cloth to prevent from damaged if the bulb be touched by hands.

Install the bulb in reverse order of removal.
Start engine and turn the light switch ON/OFF to check if the bulb has been installed properly after installation.
Please conducts the headlight beam adjustment job if replace the headlight bulb.

The headlight beam adjustment

Turn the adjustment screw to right or left to adjust the high or low beam of headlight.

Caution

- This outer cover of headlight is a fixed type so that the light seat will be moved only when adjusting.

Position light Bulb Replacement
Remove the front cover (3 screws)
Disconnect the headlight and position light wire coupler.

Pull out the bulb and replace it with new one.
(12V/10W)

Front Turn Winker Light Bulb Replacement
Remove the front cover. (3 screws)

Turn left and pull out the bulb seat.
Pull out the bulb and replace it with new one.
(12V/10W)

Installation
Install the bulb in reverse order of removal.

Bulbs Replacement of Tail Light / Brake Light

Remove the rear light lens screws. (2 screws)

Remove the rear light lens.

Push and turn left the bulb, and then remove the bulb.

Replace the bulbs of the tail light, brake light (12V 5W/18W).

Installation

Install the bulb in reverse order of removal.

Bulbs Replacement of Rear Winker Light

Remove the rear winker light lens screws. (1 screw)

Pull out the bulb and replace it with new one. (12V/10W)

Bulbs Replacement of Speedometer

Remove the handle front cover. (3 screws)

Pull out the bulb and replace it with new one.

Switch / Horn

Main Switch

Check

Remove front cover. (3 screws)
Disconnect main switch leads coupler.
Check coupler terminals as following pins for continuity.

Pin / Location	BAT1	BAT2	IG	E
LOCK			●	●
OFF			●	●
ON	●	●		
Wire color	Red	Black	Black/ White	Green

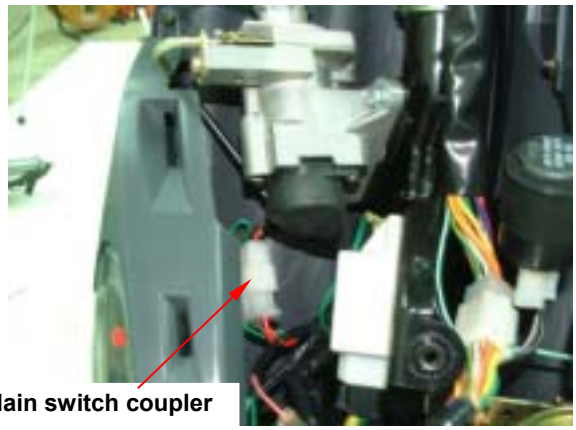

Replacement

Remove main switch cover. (1 screw)
Remove the main switch coupler and bolts (2 bolts)
Remove the main switch.
Install a new main switch and tighten the bolts. (2 bolts)

Right Handle Switch

Remove the front cover.
Disconnect the coupler of the handle switch.
Check the continuity of follow pins listed below columns.

Headlight & Dimmer switch

Pin / Location	CI	RE	TL	LO	HI
●	●	●			
	●		●	●	
	●		●		●
Wire color	Yellow	Pink	Brown	White	Blue

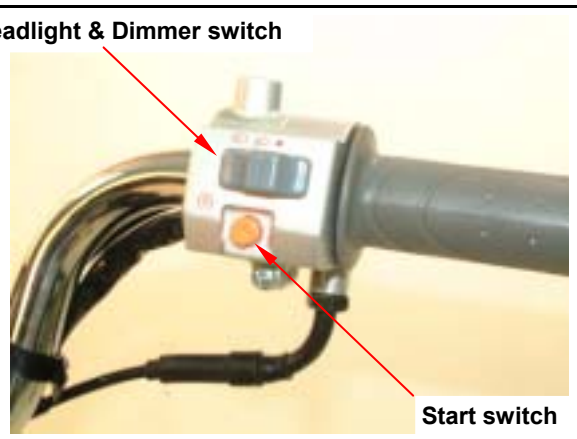

Start switch

Pin / Location	ST	E
FREE		
	●	●
Wire color	Yellow / Red	Green

Right Handle Switch

Seat open switch

Pin / Location	BAT	HO
FREE		
PUSH	●	●
Wire color	Black	Purple

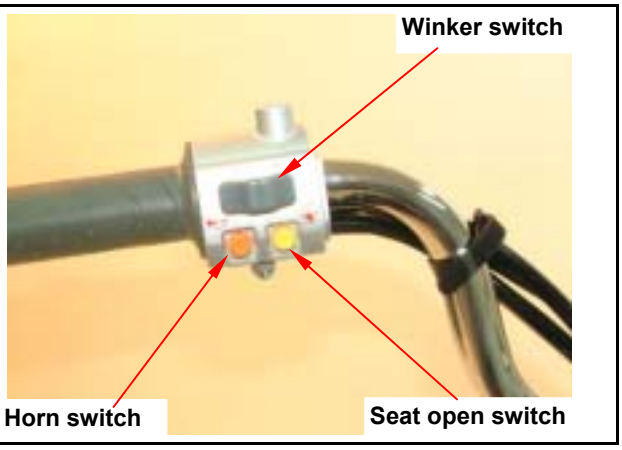

Horn switch

Pin / Location	BAT	HO
FREE		
	●	●
Wire color	Black	Light green

Winker switch

Pin / Location		W	R	L
		●	●	
N	FROM R	●	●	
	PUSH OFF			
	FROM L		●	●
			●	●
Wire color		Gray	light blue	Orange

Brake light switch

The circuit of black wire and the green/yellow wire on the brake light switch should be in continuity when operating the brake lever.
If the switch damaged, replace it with new one.

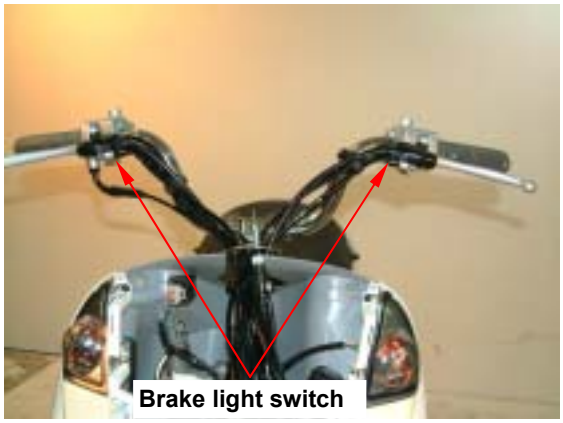

Horn

Remove the front fender.
Connect the light blue wire on the horn to the battery positive (+) terminal, and the green wire to the battery negative (-) terminal. Then, the horn should sound.
Replace it if necessary.

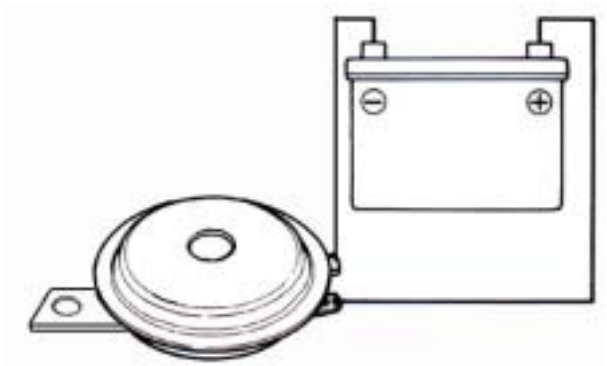

Engine Start Control Switch

Remove luggage box, and then remove engine start control switch.

Pin / Location	L/Y	L/Y
OFF	●———	———●
ON		
Wire color	Blue / Yellow	Blue / Yellow

Fuel Unit

Fuel Unit Remove

Fuel Tank Removal (Please refer to chapter 4 for more detailed.)
Disconnect the fuel unit sender coupler.
Remove the fuel level sender.

Caution

- Do not damage or bend the float arm as removing.

The resistance values are listed below when the float arm in F and E positions.

Float arm position	Resistance value
E(empty)	97.5~107.5 Ω
F(full)	4~10 Ω

Connect the fuel unit sender to the main harness.
Turn the main switch ON.
Move the float arm in UP & DOWN, and then check if the fuel unit indication needle is in correct position.

Caution

- Turn on the turn signal light to make sure battery is in good condition before this test.

Float arm position	Indicator needle
UP(full)	E(empty)
DOWN(empty)	F(full)

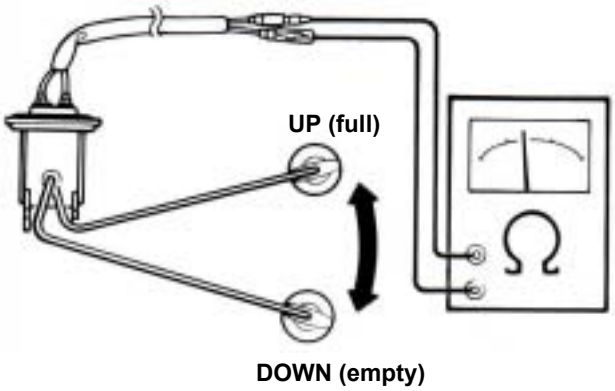

Note:

Names of Mechanisms in the Emission Control System ····· 17-1
Function of Mechanisms in the Emission Control System ····· 17-1
Fuel Evaporative Emission Control System (E.E.C.) ····· 17-2
Evaporative Emission Control System (EEC) ····· 17-3
Catalytic Converting System (CATA) · 17-4
Positive Crankcase Ventilation System (P.C.V.) ····· 17-5
Inspection Items ····· 17-6
Countermeasure for Emission Pollutants Not Within Standard as In Idle Speed (4-Stroke Engine) ····· 17-7

Names of Mechanisms in the Emission Control System

Four-Stroke Engine Model

1. Catalyst converter (CATA)
2. Evaporative Emission Control System (EEC)
3. Positive Crankcase Ventilation System (PCV)

Function of Mechanisms in the Emission Control System

General

The emission control strategy of this model was formulated basing on a four-stroke SOHC carburetor single cylinder engine. It adopts secondary air introducing device to purify the exhaust, in addition, it also adopts a charcoal canister to absorb the fuel vapor generated through evaporation in the fuel system.

※ **Engine refinements** —
Four Valves designed combustion chamber, together with optimum compression ratio, ignition timing, intake and exhaust timing, have all contributed to maximize the intake/exhaust efficiency and combustion efficiency.

※ **Secondary air introducing system** —
It is used to introduce secondary air into exhaust manifold so that incomplete burned exhausts, CO & HC, may be burned again and to be harmless gases.

System	Device	Components	Purpose & function
Combustion chamber	Combustion chamber	4-valve combustion chamber	The semi-circular combustion chamber is designed to balancing the air stream to achieve the combustion stability.
Exhaust system	Post-treatment device	Catalytic converter	Installed a three-way catalytic converter in the middle of exhaust pipe to oxidize the CO, HC in the exhaust gas.
EEC system	Evaporative emission control system	Charcoal canister Purge control valve	A canister is used to absorb vapor from fuel tank and to introduce it into carburetor at an opportune timing.
PCV system	Crankcase blow-by introducing device	Vapor separator	To introduce blow-by into combustion chamber via a vapor separator for burning then discharging.

Fuel Evaporative Emission Control System (E.E.C.)

1. Construction:

- Reduce HC to pollute air.
- To absorber fuel vapor and saving fuel consumption

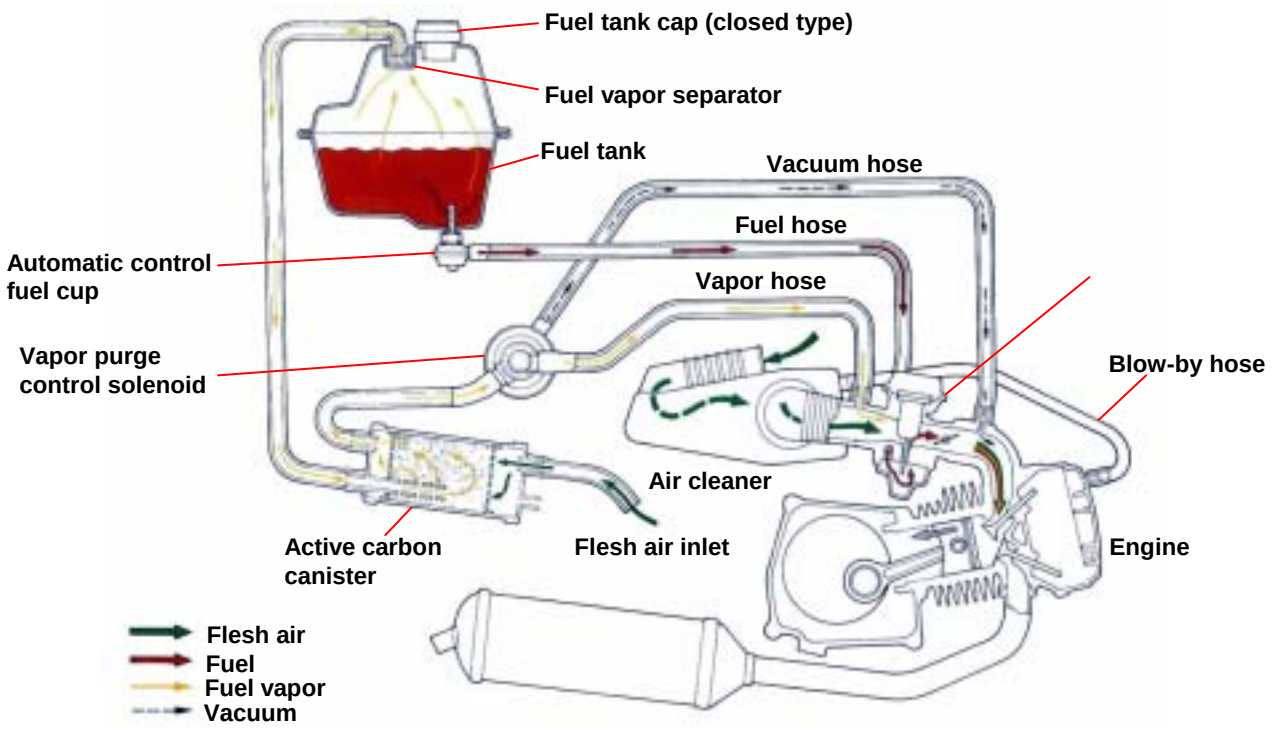

2. Principle of operation

- Vapor generated in fuel tank and fuel system through evaporation is contained in the confined system to prevent it from escaping into the atmosphere, at the same time, the vapor will be introduced into a charcoal canister where the hydrocarbon in the vapor will be absorbed by active carbon.
- When engine is running, the negative pressure of intake opens the purge line, breaks HC off from active carbon and then sucks it into engine together with air from bottom of the canister.
- The canister can be used repeatedly without reducing its performance because of the system's purge function.

3. Trouble Diagnosis:

Fuel can not flow to carburetor

- No fuel in the fuel tank
- loosen vacuum hose of the fuel pump
- plugged hose in the system

4. Cautions:

- Do not exceed the reed valve of the fuel filler when filling out fuel.
- Do not have rush acceleration or running in high speed when applying the spare fuel.

Evaporative Emission Control System (EEC)

1. Visual check:

1) Check the outside of canister for damage.
2) Check all hoses for breakage.

2. Leak test:

1) Disconnect the Vapor purge control solenoid hose, and connect a T-type hose connector to a pressure gauge and a pressure source as shown below:

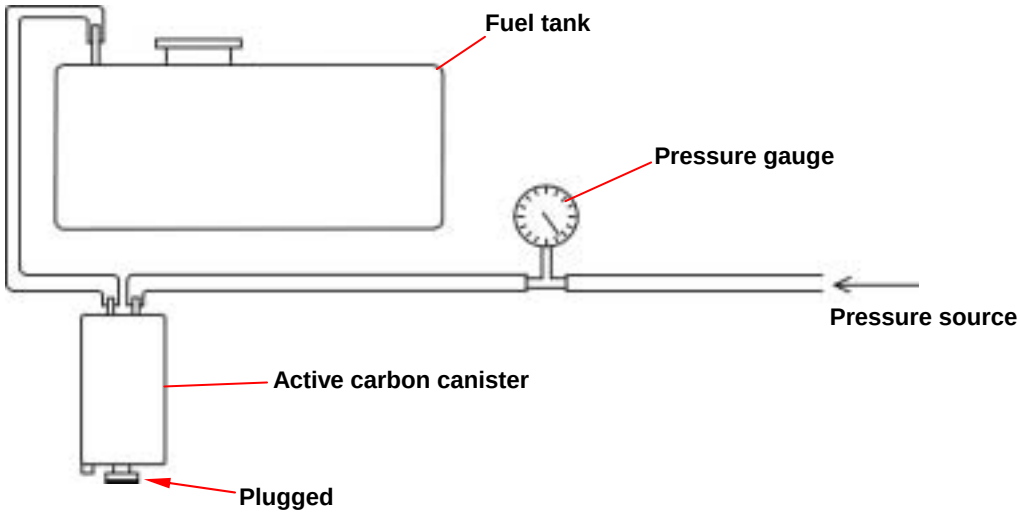

2) Plug canister vent.
3) Apply 100mmAq into pressure source inlet then plug it. The pressure at the gauge should not drop to below 10mmAq within 10 seconds.

3. PCV Function Test

1) Disconnect the hose of connection to the active carbon canister, and then connect a T-type hose connector to pressure source as shown below:

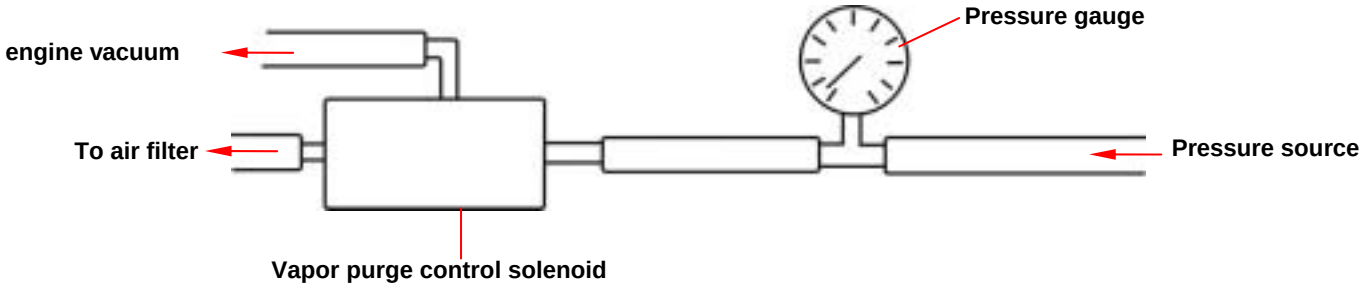

2) Apply 100mmAq into pressure source inlet as engine stopped then plug it. The pressure at the gauge should not drop to below 10mmAq within 10 seconds.

Catalytic Converting System (CATA)

1. Construction:

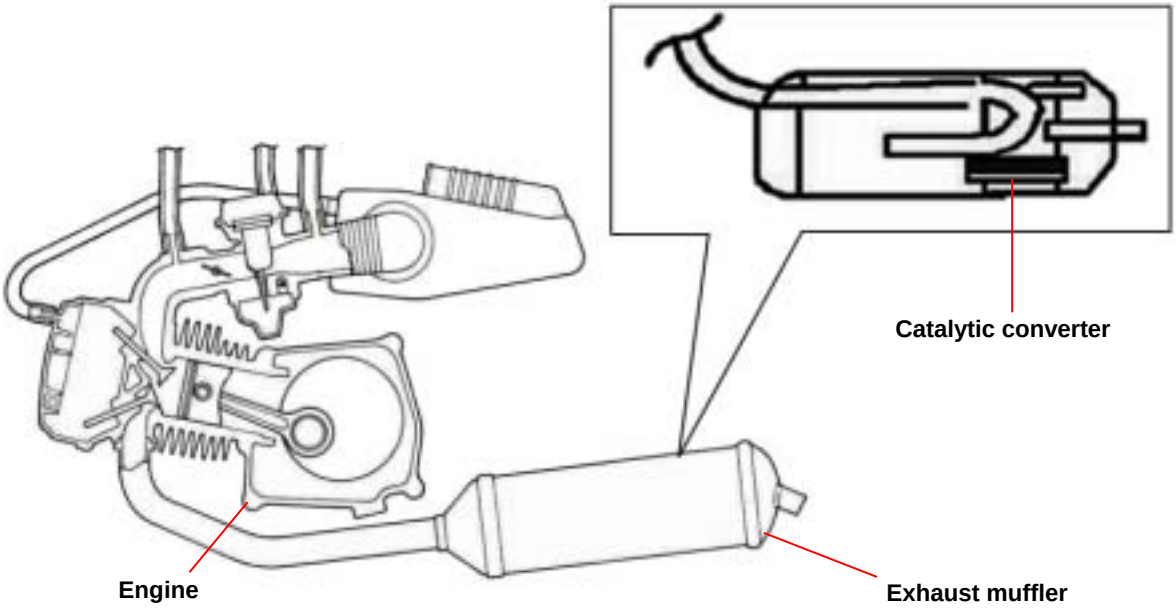

2. Description:

1) The function of the catalytic converter is to transfer unburned CO, HC, and NOx harmless CO_2, H_2O, N_2 gases.
2) Pt, Pd, Rh…etc. precious metals are used into the catalytic converter so use only unleaded gasoline to prevent from cause the catalytic converter to fail.

Positive Crankcase Ventilation System (P.C.V.)

1. Construction

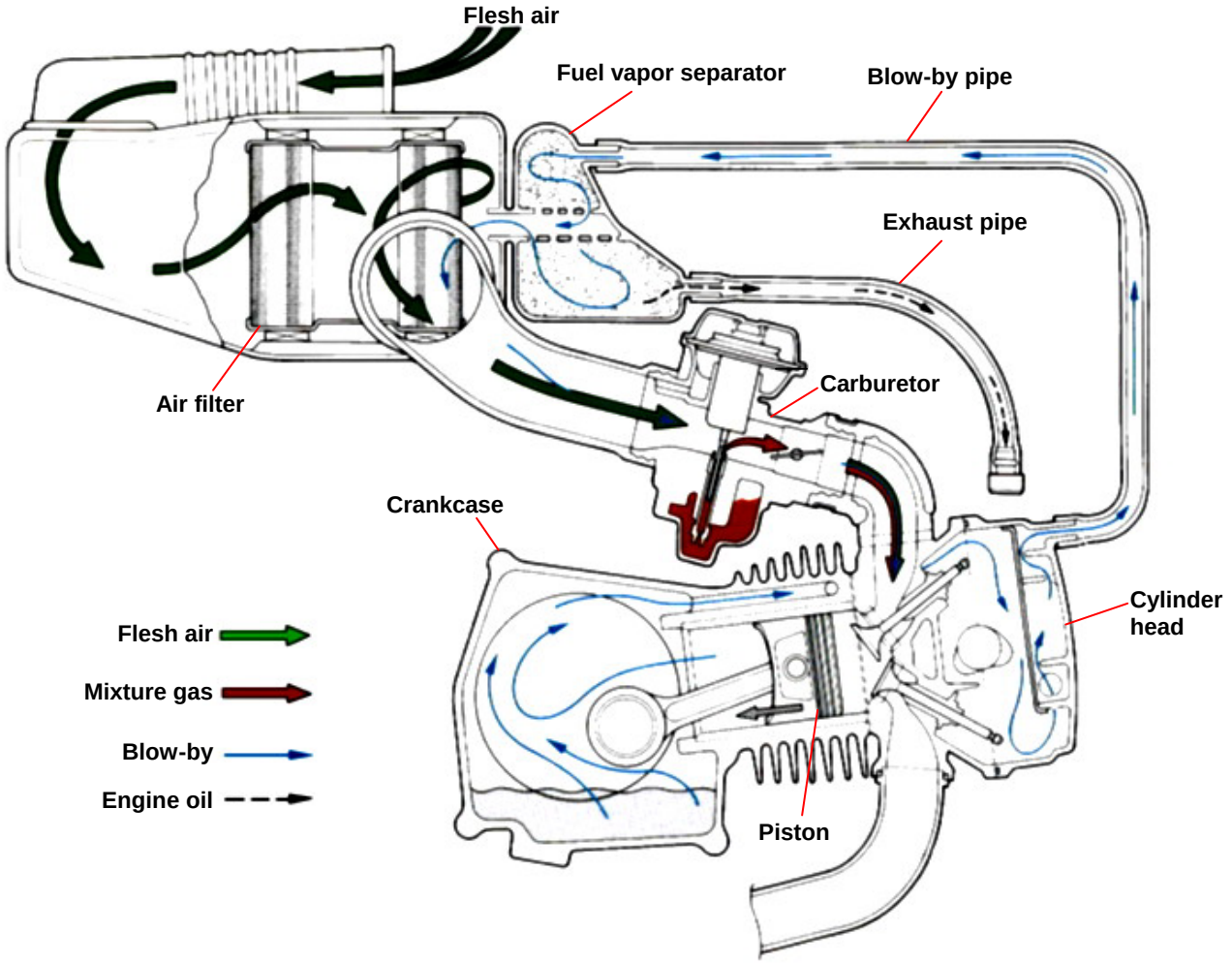

2. Principle of operation:

- Install a separated chamber on cylinder head, and suck the blow-by gas to the fuel vapor separator by engine vacuum.
- Drill a hole in the air cleaner and install a vapor separator, so that blow-by from crankcase will flow through a cylinder check valve and then separated by the separator.
- The separated vapor will be sucked into combustion chamber by engine negative pressure to be burned again instead of discharging into atmosphere. Drain liquidized fuel in the drain pipe periodically.

3. Service Methods

Visual check:

- Remove drain plug to drain the fuel when fuel level on the drain pipe reaches 80 % full.
- Check connecting hose for damage and looseness.

Inspection Items

Secondary air injection system

1. Visual inspect the reed valve, air injection cut valve, and secondary air filter as well as hoses for damage.
2. Leaking check.
3. Warm-up running check.

Fuel Evaporation Control System

1. Visual inspect the carbon canister and hoses for damage.
2. Leaking check.
3. Function test of the purge control solenoid.

Catalytic converter

1. Check if exhaust gas content is within standard.
2. Remove the exhaust pipe and shake it gently for noise.

Fuel Supply System

1. Clean the air filter.
2. Check the air filter.
3. Clean the carburetor fuel jet, air jet and all circuit with air gun or specified solvent.
4. Check the float level of carburetor.
5. Adjust CO/HC values at idling. (engine rpm must be within specification)

Ignition system

1. Spark plug check and replacement.
2. Ignition coil check and replacement.

Countermeasure for Emission Pollutants Not Within Standard as In Idle Speed (4-Stroke Engine)

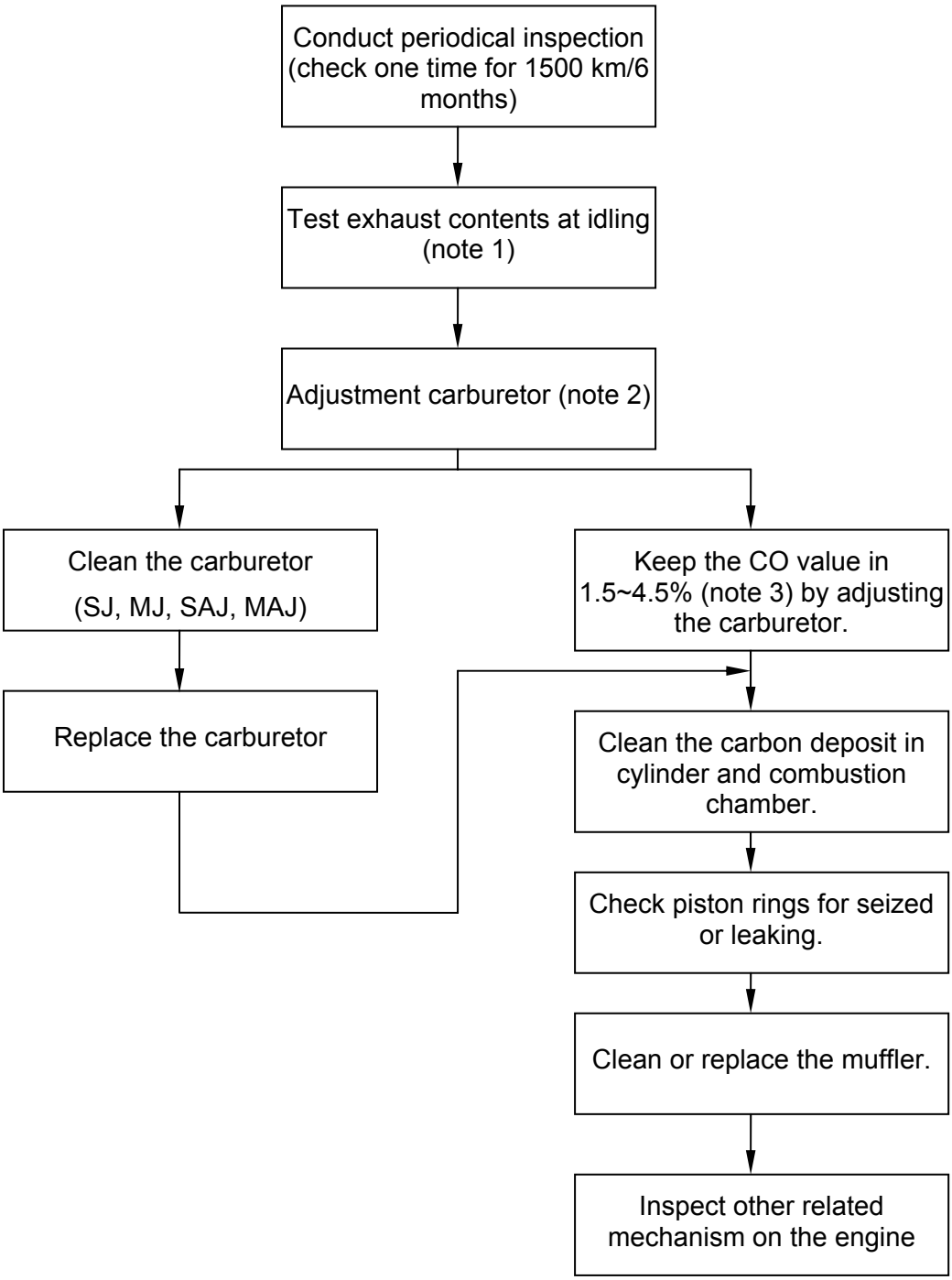

Note 1: Test it according to the idling test procedure.
Note 2: Adjustment the idle adjustment screw. Set the engine rpm in specified speed, and test CO, HC at idling. And then adjust the air adjustment screw at the same time to let CO value to be 1.5~4.5%.
Note 3: If the values still can not be reached to specification after adjusted the carburetor, then clean or replace it with new one according to the procedures.

Note:

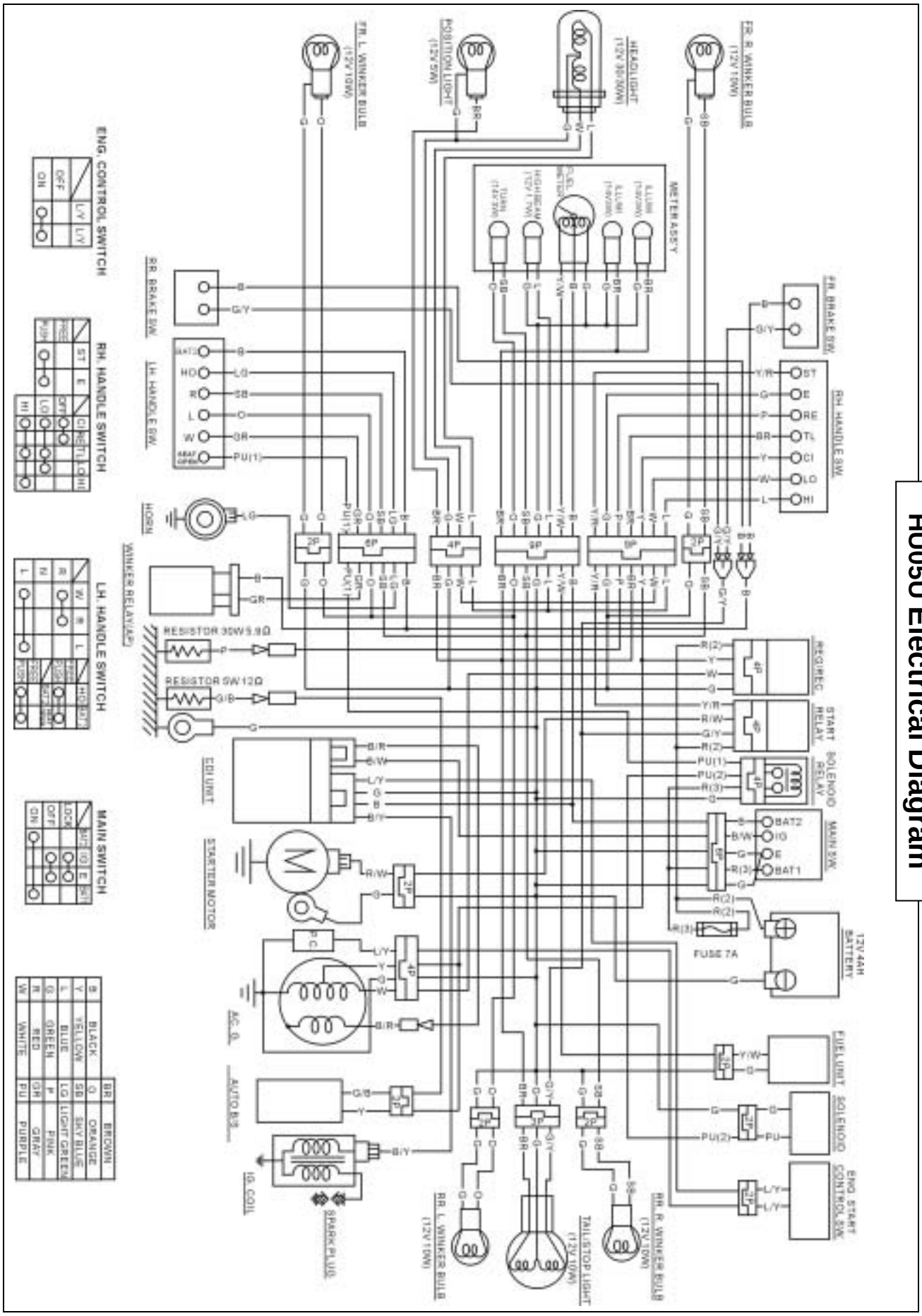
HU05U Electrical Diagram
FR. R. WINKER BULB (12V 10W)
HEADLIGHT (12V 35/35W)
POSITION LIGHT (12V 5W)
FR. L. WINKER BULB (12V 10W)
METER ASSY
FR. BRAKE SW.
RH. HANDLE SW.
RR. BRAKE SW.
LH. HANDLE SW.
HORN
WINKER RELAY
RESISTOR 35W 5.8Ω
RESISTOR 5W 12Ω
REG/REC
START RELAY
SOLENOID RELAY
MAIN SW.
12V 4AH BATTERY
FUSE 7A
EDI UNIT
STARTER MOTOR
AC. G.
AUTO B.S.
IG. COIL
SPARK PLUG
FUEL UNIT
SOLENOID
ENG START CONTROL SW.
RR. L. WINKER BULB (12V 10W)
TAIL/STOP LIGHT (12V 10/4W)
RR. R. WINKER BULB (12V 10W)
ENG. CONTROL SWITCH
RH. HANDLE SWITCH
LH. HANDLE SWITCH
MAIN SWITCH
BLACK
BROWN
YELLOW
ORANGE
BLUE
SKY BLUE
LIGHT GREEN
GREEN
RED
PINK
GRAY
WHITE
PURPLE
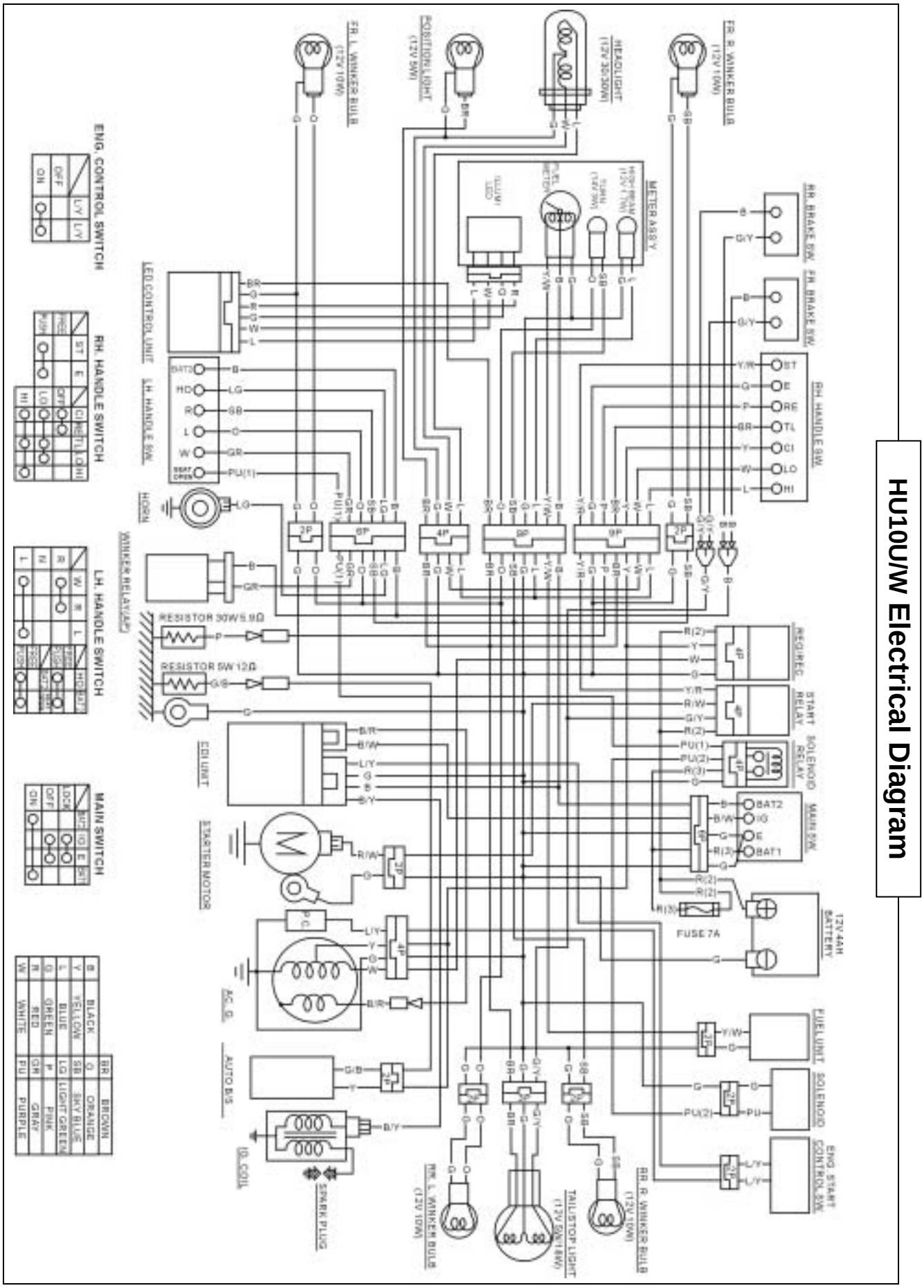
18. Electrical Diagram